ENCLOSURE INFORMATION		
	P/N:	DESCRIPTION:
BOX:	23841KBAM	BOX SST EF 1b, M20 BOTTOM
COVER:	23813ACAB	COVER SST EF 1b, TWO DEVICE
MOUNT METHOD:	HKHPMBRKT	HKH PANEL MOUNT BRACKET, C. B. & P. L. (2 PL.)

DEVICE 1 ASSEMBLY (1F)		
	P/N:	DESCRIPTION:
DEVICE:	HKHPLR	PILOT LIGHT RED LENS ASSEMBLY
LEGEND PLATE:	23225AAAB	LAM., BLANK
LOCKOUT DEV.:	N/A	N/A
CONTACT 1:	HKHPLP	PILOT LGHT MOD,PM

DEVICE 2 ASSEMBLY (2F)		
	P/N:	DESCRIPTION:
DEVICE:	HKHPLG	PILOT LIGHT GREEN LENS ASSEMBLY
LEGEND PLATE:	23225AAAB	LAM., BLANK
LOCKOUT DEV.:	N/A	N/A
CONTACT 1:	HKHPLP	PILOT LGHT MOD,PM

PILOT LIGHT RATINGS:
LIGHT EMITTING DIODE
12-254 VAC/VDC LED
0.6WTERMINALS RATED FOR 1-2 CONDUCTORS
#22-10 AWG. (0.5-4mm2)

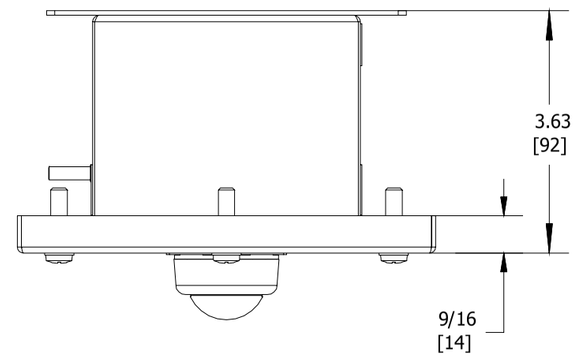

TOP VIEW

HUBBELL® Harsh & Hazardous
CAT. NO. HKHMOD Series
DATE CODE-S/N
WWW.HARSHANDHAZARDOUS.COM
ST. LOUIS, MO 63113

CE 0539 Ex II2G Ex de IIC T6...T4 Gb
0539 Ex II2D Ex tb IIIC T85°C...T135°C Db IP66
DEMKO 15 ATEX 1405X
Ex de IIC T6...T4 Gb;
Ex tb IIIC T85°C...T135°C Db IP66
IECEx UL 15.0054X
-50°C ≤Ta≤+60°C
(-40°C ≤Ta≤+55°C WITH AMMETER)

SEE IOM FORM K1466 & K1470
FOR T-CODES AND FOR ELECTRICAL RATINGS.

TR RU C-US.MIO62.B.04167
IEx 16.0079 INMETRO

HUBBELL® Harsh & Hazardous
CAT. NO. HKHMOD Series
DATE CODE-S/N
WWW.HARSHANDHAZARDOUS.COM
ST. LOUIS, MO 63113

INDUSTRIAL CONTROL EQUIPMENT FOR USE IN ZONE CLASSIFIED HAZ. LOCS.
CLASS I, ZONE 1, AEx de IIC T6...T4 Gb; Ex de IIC T6...T4 Gb
ZONE 21, AEx tb IIIC T85°C...T135°C Db IP66; Ex tb IIIC T85°C...T135°C Db IP66
CLASS I, DIV.2, GRPS. A,B,C,D; CLASS II, DIV.1, GRPS. E,F,G (CANADA ONLY)
CLASS II, DIV.2, GROUPS E,F,G; CLASS III
CLASS III; TYPE 3/4/4X/12/13; -50°C ≤Ta≤+60°C

c UL us LISTED A243

SEE IOM FORM K1466 FOR ELECTRICAL RATINGS.

CERTIFICATION NAME PLATES

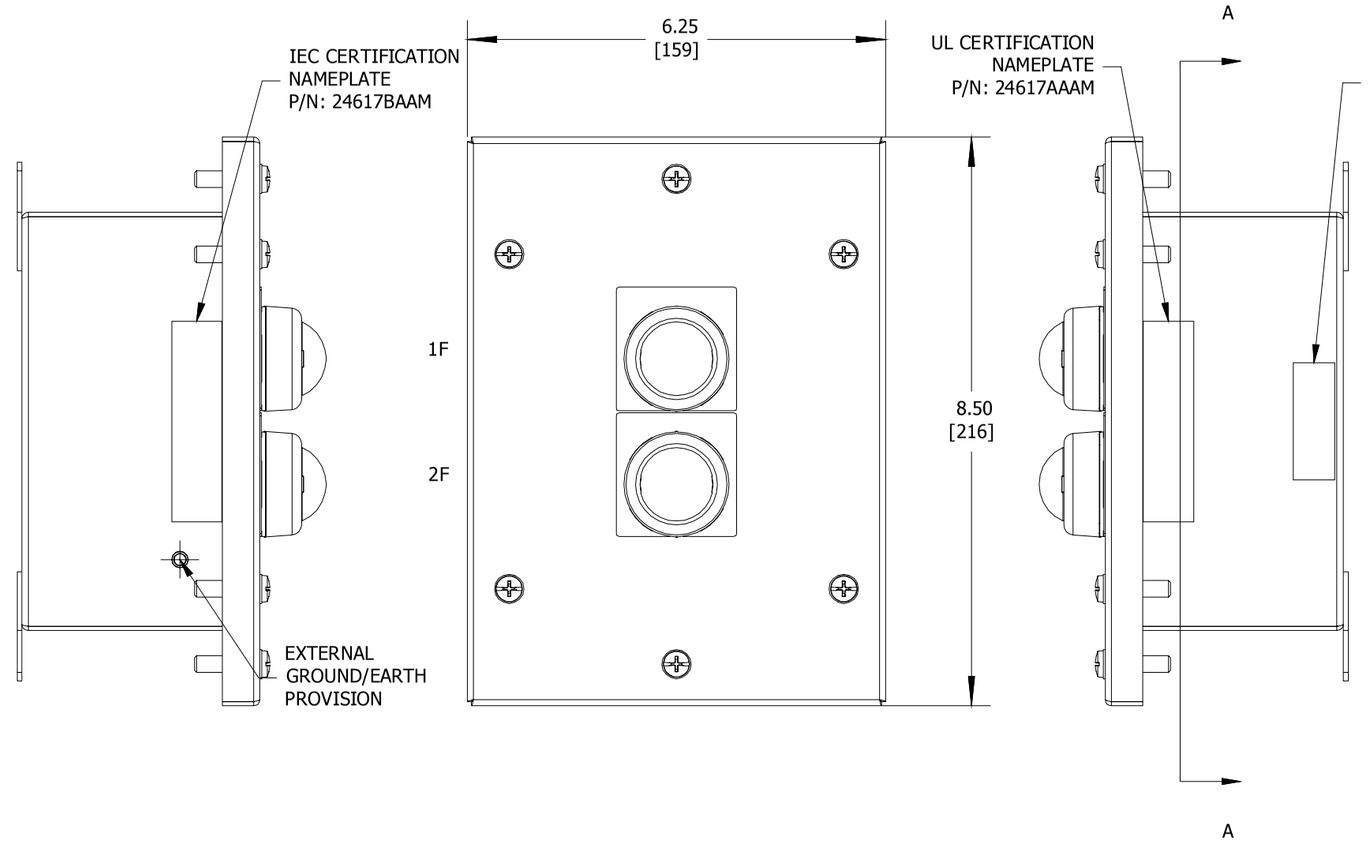

LEFT SIDE VIEW

FRONT VIEW

RIGHT SIDE VIEW

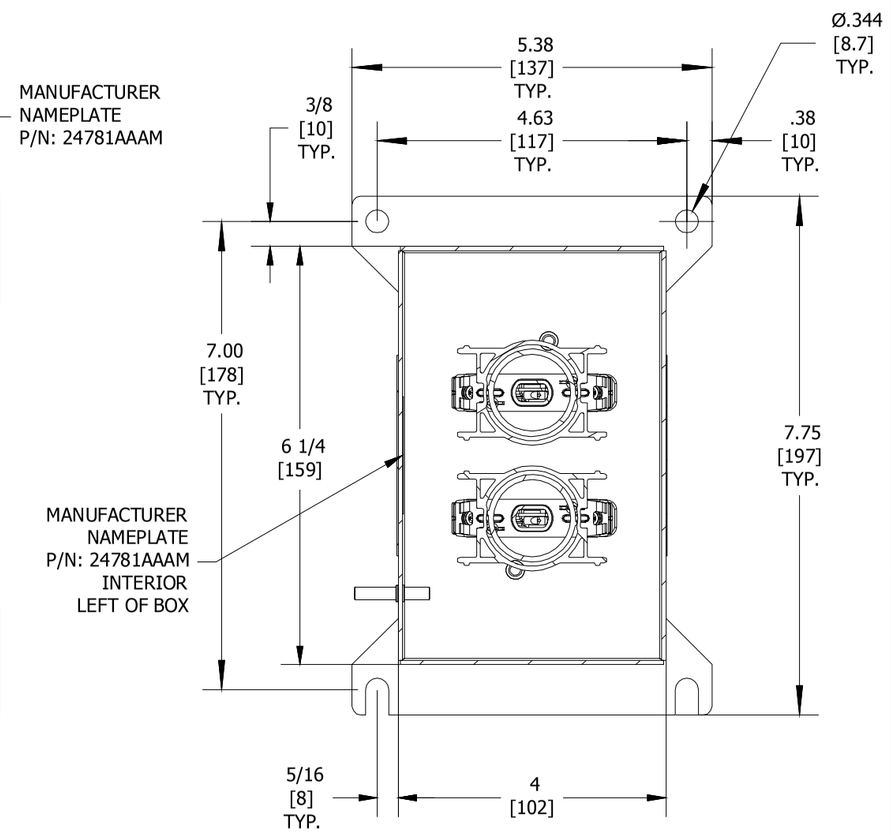

SECTION A-A VIEW

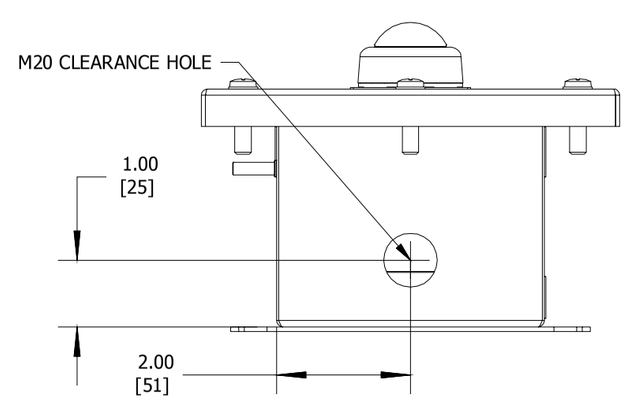

BOTTOM VIEW

ENTRY HUB/GLAND SELECTION CHART*	
ENTRY NO.	HUB/GLAND:
ENTRY 1	NONE

*HUBS & CABLE GLANDS ARE SHIPPED WITH ENCLOSURE

HUBBELL®
HKH SERIES
CONTROL STATION
CAT. NO. HKH1BEPALRL0LGL0
COUNTRY/DATE CODE
WWW.HARSHANDHAZARDOUS.COM

COMMENT:	SGN:	DATE:	ACCEPTANCE:
			CODE 1: APPROVED (NO COMMENTS)
			CODE 2: APPROVED FOR MANUFACTURING WITH COMMENTS TO BE INCORPORATED
			CODE 3: NOT APPROVED RE-SUBMIT
			CODE 4: FOR INFORMATION ONLY

A	REVISION

HUBBELL® KILLARK®

THIS DOCUMENT IS THE PROPERTY OF HUBBELL - KILLARK. IT IS LOANED TO YOU AND MUST NOT BE USED IN ANY WAY DETRIMENTAL TO THE INTEREST HUBBELL - KILLARK.

DRAWN BY:	DATE:	DWG NUMBER: HKH1BEPALRL0LGL0	
PR	10/24/2016	SALES/QUOTE NO.: N/A	ITEM: N/A

TITLE:
HKH MODIFIED ENCLOSURE
(HKH1BEPALRL0LGL0)

SHEET 1 OF 1