ENCLOSURE INFORMATION		
	P/N:	DESCRIPTION:
BOX:	23197CBAM	BOX PLASTIC 1b, 3/4 NPT BOTTOM
COVER:	23194CAAB	COVER PLASTIC HKH 1b, TWO DEVICE
MOUNT METHOD:	23203BAAB	ASSY, DIN RAIL HKH 2 TIER

DEVICE 1 ASSEMBLY (1F)		
	P/N:	DESCRIPTION:
DEVICE:	HKHPLR	PILOT LIGHT RED LENS ASSEMBLY
LGND. PLATE:	23225AAAB	Blank
LOCKOUT ACCY:	N/A	N/A
CONTACT 1:	HKHPLD	PILOT LGHT MOD, DM

DEVICE 2 ASSEMBLY (2F)		
	P/N:	DESCRIPTION:
DEVICE:	HKHPLG	PILOT LIGHT GREEN LENS ASSEMBLY
LGND. PLATE:	23225AAAB	Blank
LOCKOUT ACCY:	N/A	N/A
CONTACT 1:	HKHPLD	PILOT LGHT MOD, DM

PILOT LIGHT RATINGS:
LIGHT EMITTING DIODE
12-254 VAC/VDC LED
0.6WTERMINALS RATED FOR 1-2 CONDUCTORS
#22-10 AWG. (0.5-4mm2)

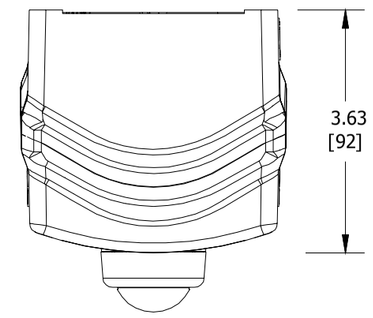

TOP VIEW

HUBBELL® Harsh & Hazardous
CAT. NO. HKHMOD Series
DATE CODE-S/N
WWW.HARSHANDHAZARDOUS.COM
ST. LOUIS, MO 63113
0539 Ex II2G Ex de IIC T6...T4 Gb
0539 Ex II2D Ex tb IIIC T85°C...T135°C Db IP66
DEMKO 15 ATEX 1405X
Ex de IIC T6...T4 Gb;
Ex tb IIIC T85°C...T135°C Db IP66
IECEx UL 15.0054X
-50°C ≤Ta≤+60°C
(-40°C ≤Ta≤+55°C WITH AMMETER)
SEE IOM FORM K1466 & K1470
FOR T-CODES AND FOR ELECTRICAL RATINGS.
Segurança
TR RU C-US.MIO62.B.04167
IEx 16.0079 INMETRO

HUBBELL® Harsh & Hazardous
CAT. NO. HKHMOD Series
DATE CODE-S/N
WWW.HARSHANDHAZARDOUS.COM
ST. LOUIS, MO 63113
INDUSTRIAL CONTROL EQUIPMENT FOR USE IN ZONE CLASSIFIED HAZ. LOCS.
CLASS I, ZONE 1, AEx de IIC T6...T4 Gb; Ex de IIC T6...T4 Gb
ZONE 21, AEx tb IIIC T85°C...T135°C Db IP66; Ex tb IIIC T85°C...T135°C Db IP66
CLASS I, DIV.2, GRPS. A,B,C,D; CLASS II, DIV.1, GRPS. E,F,G (CANADA ONLY)
CLASS II, DIV.2, GROUPS E,F,G; CLASS III
CLASS III; TYPE 3/4/4X/12/13; -50°C ≤Ta≤+60°C
c UL us LISTED A243
SEE IOM FORM K1466 FOR ELECTRICAL RATINGS.

CERTIFICATION NAME PLATES

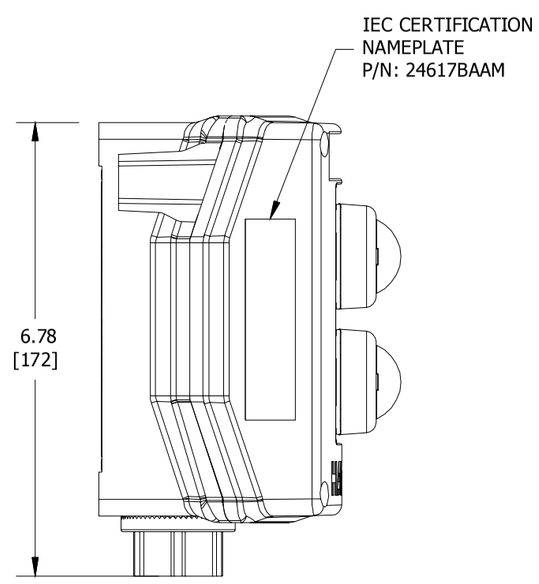

LEFT SIDE VIEW

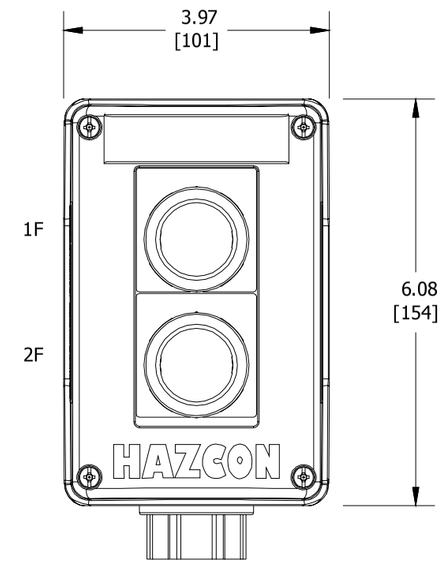

FRONT VIEW

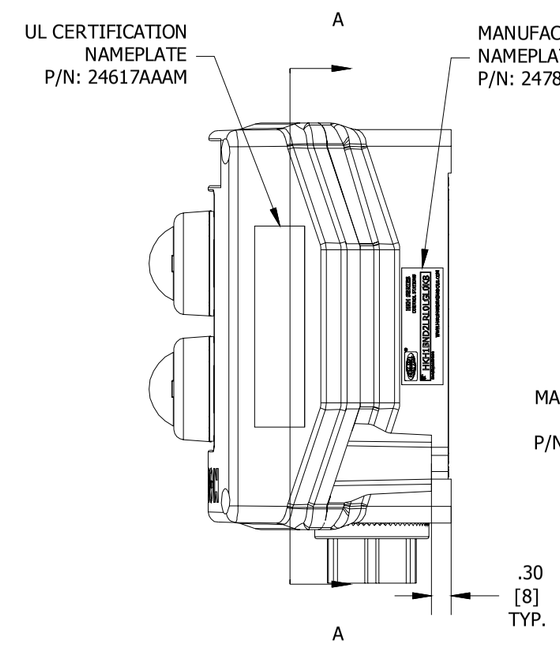

RIGHT SIDE VIEW

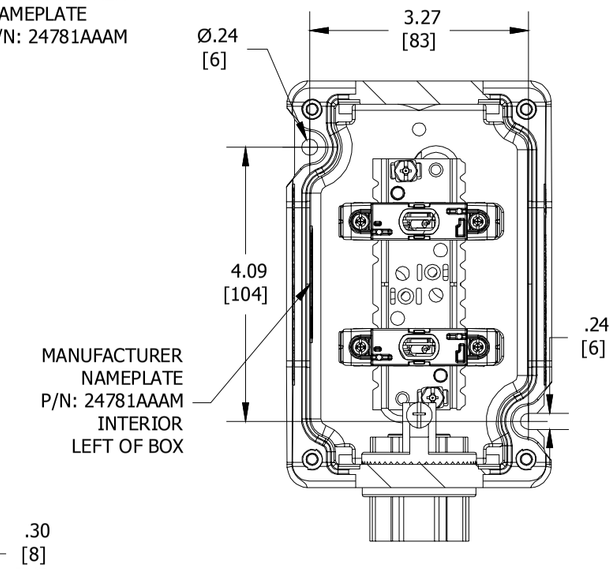

SECTION A-A VIEW

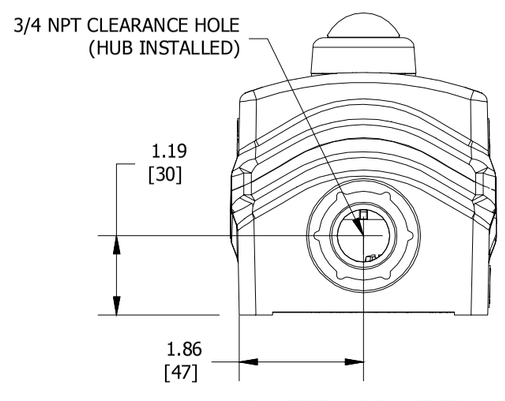

BOTTOM VIEW

ENTRY HUB/GLAND SELECTION CHART*	
ENTRY NO.	HUB/GLAND:
ENTRY 1	K8: WH-2SSG

*HUBS & CABLE GLANDS ARE SHIPPED WITH ENCLOSURE

HUBBELL®
HKH SERIES
CONTROL STATIONS
CAT. NO. HKH1BND2LRL0LGL0K8
COUNTRY/DATE CODE
WWW.HARSHANDHAZARDOUS.COM

MFG. NAME PLATE (REF.)

COMMENT:	SGN:	DATE:	ACCEPTANCE:
			CODE 1: APPROVED (NO COMMENTS)
			CODE 2: APPROVED FOR MANUFACTURING WITH COMMENTS TO BE INCORPORATED
			CODE 3: NOT APPROVED RE-SUBMIT
			CODE 4: FOR INFORMATION ONLY

DRAWN BY:	DATE:	DWG NUMBER: HKH1BND2LRL0LGL0K8	
PR	09/19/2016	SALES/QUOTE NO.: N/A	ITEM: N/A
TITLE: HKH MODIFIED ENCLOSURE (HKH1BND2LRL0LGL0K8)			SHEET 1 OF 1

A	REVISION	

HUBBELL® KILLARK®

THIS DOCUMENT IS THE PROPERTY OF HUBBELL - KILLARK. IT IS LOANED TO YOU AND MUST NOT BE USED IN ANY WAY DETRIMENTAL TO THE INTEREST HUBBELL - KILLARK.