ENCLOSURE INFORMATION		
	P/N:	DESCRIPTION:
BOX:	23831CBAM	BOX SST IF 1b, 3/4 NPT BOTTOM
COVER:	23804ABAB	COVER SST IF 1b, ONE DEVICE
MOUNT METHOD:	HKHPMBRKT	HKH PANEL MOUNT BRACKET, C. B. & P. L. (1 PL.)

DEVICE 1 ASSEMBLY (1F)		
	P/N:	DESCRIPTION:
DEVICE:	HKH3PSMTIH	3 POS SEL SWT MAINT CONT IND CAM, HORIZ
LEGEND PLATE:	23225ACAB	LAM., HAND OFF AUTO
LOCKOUT DEV.:	NONE	N/A
CONTACT 1:	HKH1NO20P	CONTACT BLCK, FACT SEALED N.O. PM, 20A
CONTACT 2:	HKH1NO20P	CONTACT BLCK, FACT SEALED N.O. PM, 20A

CONTACT BLOCK RATINGS:
690 VAC, 20A, 50-60
60 VDC, 5A, 110VDC, 1.5A

1/2 HP @ 120 VAC, 1 HP @ 208/240/277VAC
NEMA A600/P600 - PILOT DUTY
350VAC, 20A - TUNGSTEN
AC690V 16A AC-12
AC230V 16A AC-15
50-60HZ
DC60V 5A DC-13
TERMINALS RATED FOR 1-2 CONDUCTORS
#22-10 AWG. (0.5-4mm2)

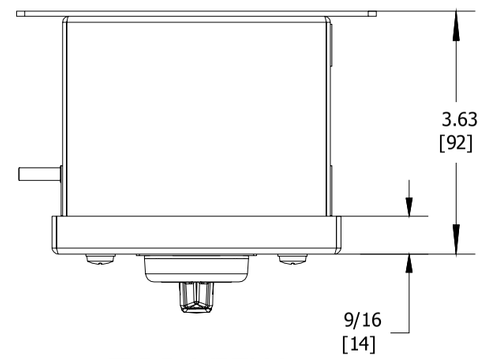

TOP VIEW

HUBBELL® Harsh & Hazardous
CAT. NO. HKHMOD Series
DATE CODE-S/N
WWW.HARSHANDHAZARDOUS.COM
ST. LOUIS, MO 63113
0539 II2G Ex de IIC T6...T4 Gb
0539 II2D Ex tb IIIC T85°C...T135°C Db IP66
DEMKO 15 ATEX 1405X
Ex de IIC T6...T4 Gb;
Ex tb IIIC T85°C...T135°C Db IP66
IECEx UL 15.0054X
-50°C ≤Ta≤+60°C
(-40°C ≤Ta≤+55°C WITH AMMETER)
SEE IOM FORM K1466 & K1470
FOR T-CODES AND FOR ELECTRICAL RATINGS.
TR RU C-US.MIO62.B.04167
IEx 16.0079 INMETRO

HUBBELL® Harsh & Hazardous
CAT. NO. HKHMOD Series
DATE CODE-S/N
WWW.HARSHANDHAZARDOUS.COM
ST. LOUIS, MO 63113
INDUSTRIAL CONTROL EQUIPMENT FOR USE IN ZONE CLASSIFIED HAZ. LOCS.
CLASS I, ZONE 1, AEx de IIC T6...T4 Gb; Ex de IIC T6...T4 Gb
ZONE 21, AEx tb IIIC T85°C...T135°C Db IP66; Ex tb IIIC T85°C...T135°C Db IP66
CLASS I, DIV.2, GRPS. A,B,C,D; CLASS II, DIV.1, GRPS. E,F,G (CANADA ONLY)
CLASS II, DIV.2, GROUPS E,F,G; CLASS III
CLASS III; TYPE 3/4/4X/12/13; -50°C ≤Ta≤+60°C
LISTED A243
SEE IOM FORM K1466 FOR ELECTRICAL RATINGS.

CERTIFICATION NAME PLATES

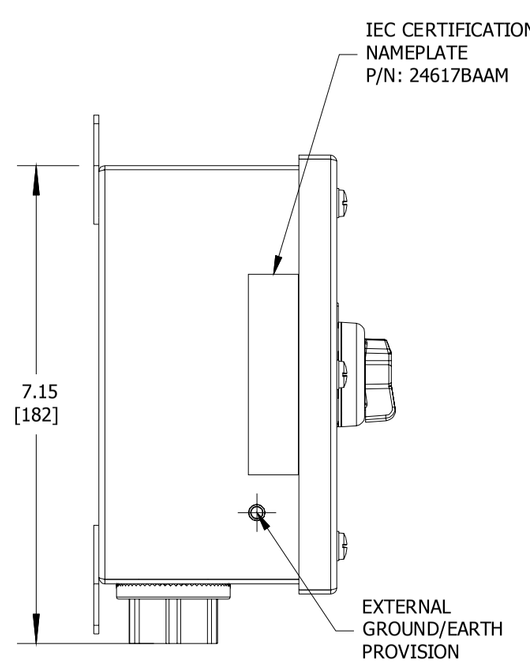

LEFT SIDE VIEW

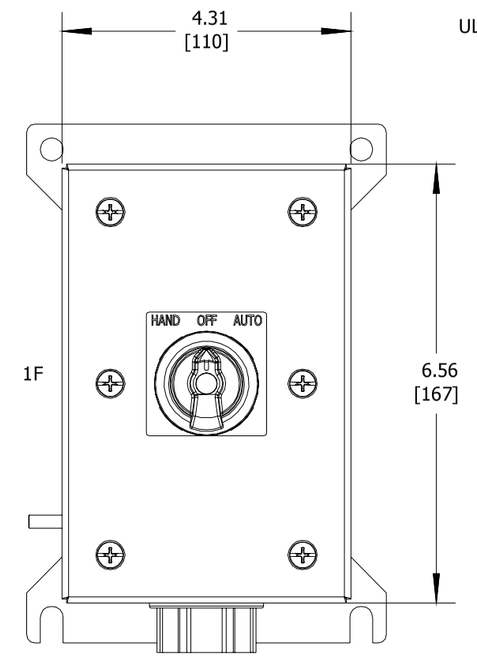

FRONT VIEW

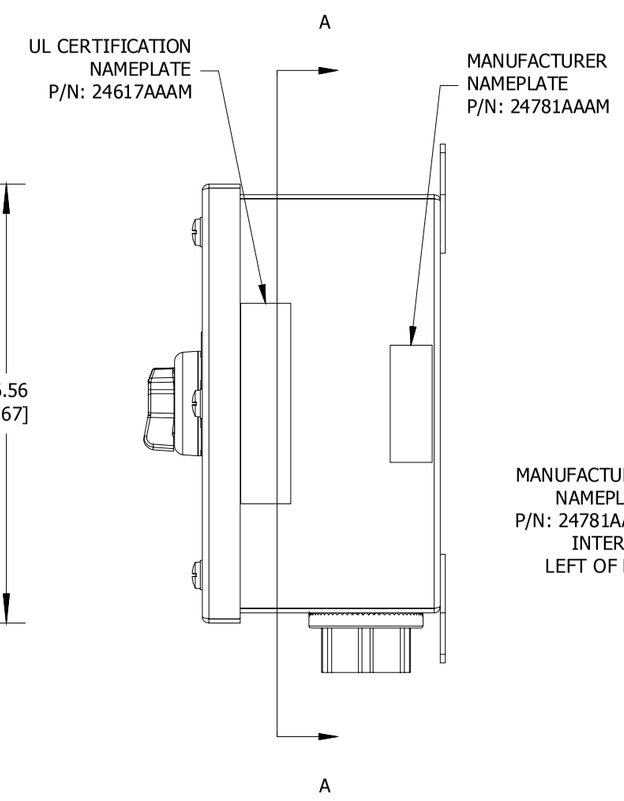

RIGHT SIDE VIEW

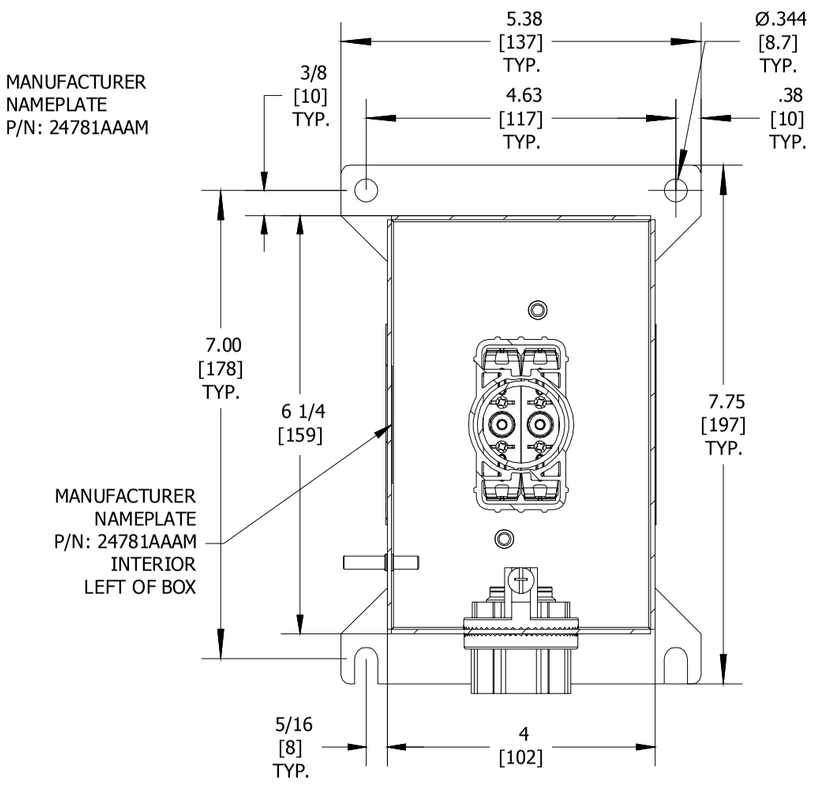

SECTION A-A VIEW

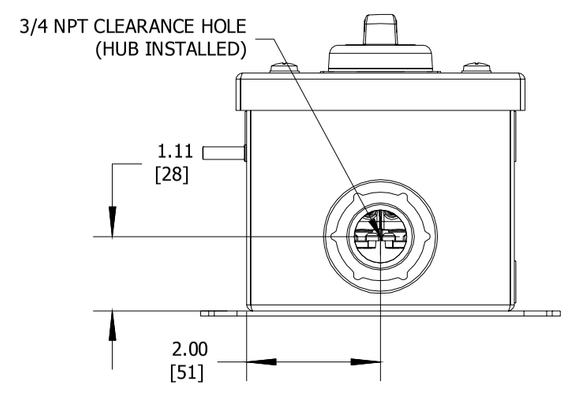

BOTTOM VIEW

ENTRY HUB/GLAND SELECTION CHART*	
ENTRY NO.	HUB/GLAND:
ENTRY 1	K8: WH-2SSG

*HUBS & CABLE GLANDS ARE SHIPPED WITH ENCLOSURE

HUBBELL® HKH SERIES CONTROL STATION
CAT. NO. HKH1BSP2S349K8
COUNTRY/DATE CODE
WWW.HARSHANDHAZARDOUS.COM

COMMENT:	SGN:	DATE:	ACCEPTANCE:
			CODE 1: APPROVED (NO COMMENTS)
			CODE 2: APPROVED FOR MANUFACTURING WITH COMMENTS TO BE INCORPORATED
			CODE 3: NOT APPROVED RE-SUBMIT
			CODE 4: FOR INFORMATION ONLY

REVISION	
A	

HUBBELL® KILLARK®
THIS DOCUMENT IS THE PROPERTY OF HUBBELL - KILLARK. IT IS LOANED TO YOU AND MUST NOT BE USED IN ANY WAY DETRIMENTAL TO THE INTEREST HUBBELL - KILLARK.

DRAWN BY:	DATE:	DWG NUMBER:	
PR	10/27/2016	HKH1BSP2S349K8	
		SALES/QUOTE NO.: N/A	ITEM: N/A

TITLE:
HKH MODIFIED ENCLOSURE
(HKH1BSP2S349K8)

SHEET 1 OF 2