M-11849 | 1

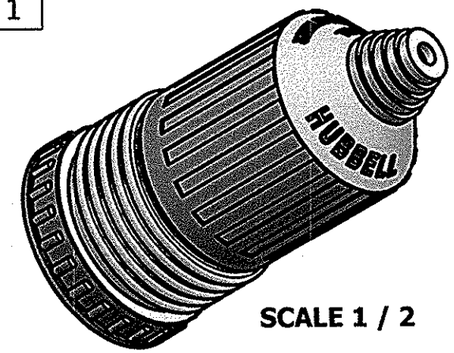

SCALE 1 / 2

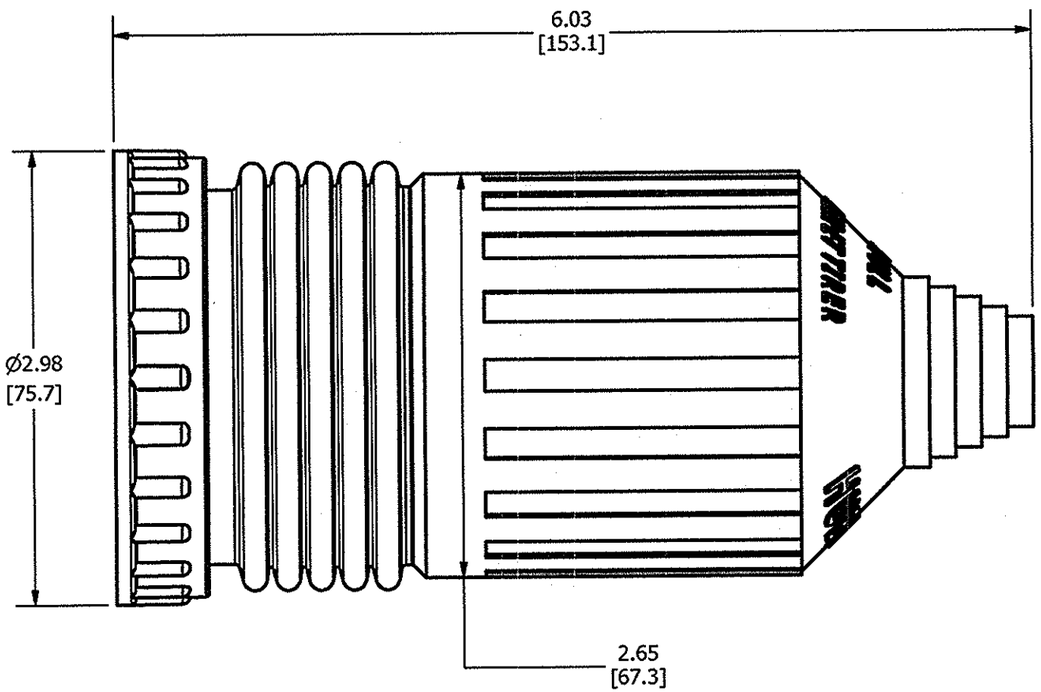

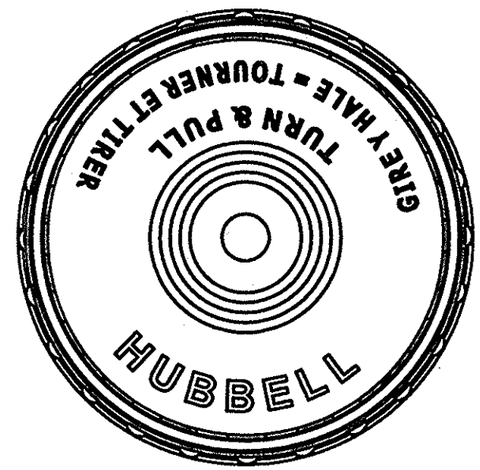

CATALOG NUMBER	COLOR
HBL7715L	BLACK
HBL77CM15L	YELLOW
HBL77CM175W	WHITE

NOTES: UNLESS OTHERWISE SPECIFIED
1. DIMENSIONS IN INCHES [mm].
2. TOLERANCES: ± .1 [2.5 mm].
3. NOT UL LISTED OR CSA CERTIFIED.
4. FOR USE WITH HUBBELL PRO CONNECTORS WHEN MATING TO 50A "SHIP-TO-SHORE" INLETS.

LIST OF PARTS

DESCRIPTION	MATERIAL	FINISH
BOOT	SANTOPRENE	SEE TABLE
THREADED RING	PC	GRAY

DIMENSION SHEET FOR CAT. NO. SEE TABLE

REPAIRABLE ☐ NON-REPAIRABLE ☒

MAM

SYM	DESCRIPTION	APPROVED	DATE
1	RELEASE PER DCN 17251	TLS	1/31/11

THE DESIGN AND DIMENSIONS OF THE PRODUCT SHOWN ON THIS DRAWING ARE SUBJECT TO CHANGE WITHOUT NOTICE

TITLE
CONNECTOR BOOT WITH RING, 50A HUBBELL PRO

TOLERANCES UNLESS OTHERWISE SPECIFIED
FRACTIONS ±1/64
DECIMALS ±.005
ANGLES ±2°

WIRING DEVICE-KELLEMS
HUBBELL INCORPORATED
SHELTON, CT

DR. BY	MAM	APP. BY	TLS
TR. BY	MAM	SCALE	1:1
CHK'D BY	TLS	DATE	1/20/2011

B M-11849 1

CODE 74545