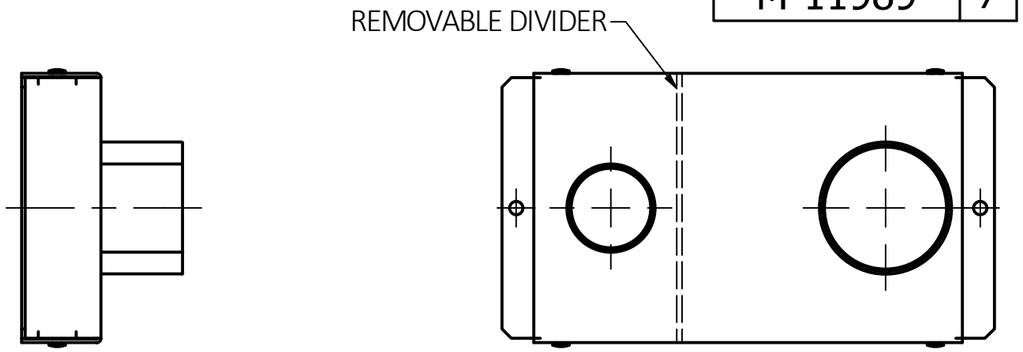

S1R8JNC1

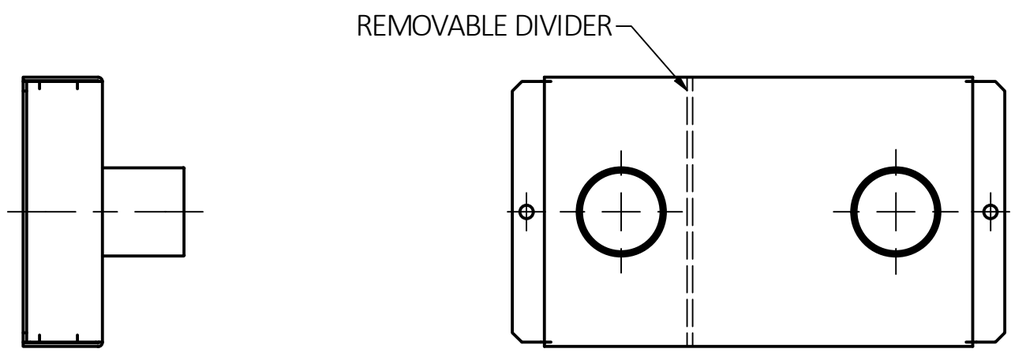

S1R8JNC2

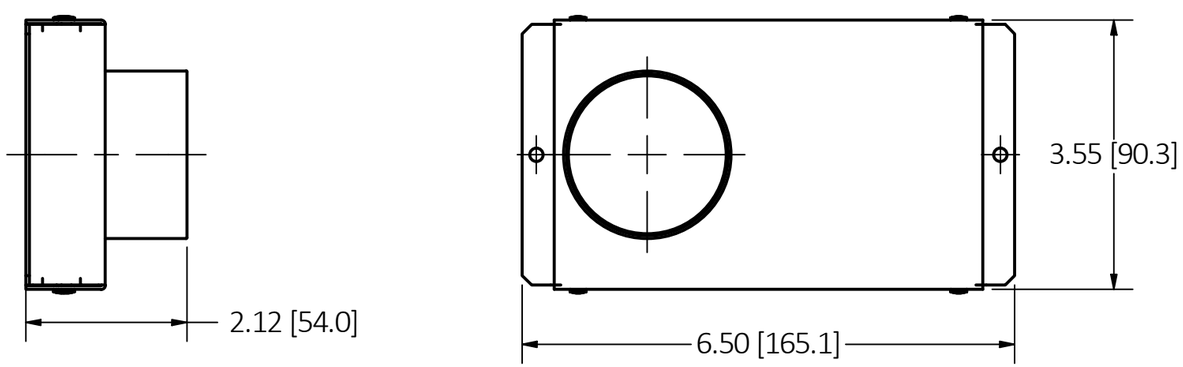

S1R8JNC3

CATALOG NUMBER	BOTTOM FEED CONDUIT SIZES
S1R8JNC1	1" & 1-1/2" EMT
S1R8JNC2	(2) 1" EMT
S1R8JNC3	2" EMT

NOTES:
1) ALL DIMENSIONS ARE IN INCHES AND [MILLIMETERS]
2) ALL DIMENSIONS ARE COMMON TO ALL CATALOG NUMBERS. BOTTOM FEED BOXES VARY AS SPECIFIED.
3) (2) MOUNTING SCREWS SHIPPED LOOSELY (NOT SHOWN).

LIST OF PARTS

DESCRIPTION	MATERIAL	FINISH
BOX WELDMENT	STEEL	ZINC PLATE
EMT TUBE	STEEL	ZINC PLATE
FIRE BARRIER	FIRE BAR. MATL.	NATURAL
MOUNTING SCREWS	STEEL	ZINC PLATE
DIVIDER	GALV. STEEL	

DIMENSION SHEET FOR CAT. NO.
SEE TABLE

REV	DESCRIPTION	APP	DATE
7	ADDED CATALOG NO. S1R8JNC13 AND VIEW TO SHEET 5. DCN200430105554	AD	4/30/20
6	ADDED CATALOG NO. S1R8JNC12 AND VIEW TO SHEET 4 OF 4 PER DCN# 22946.	EM MZ	3/7/17
5	REDRAWN IN INVENTOR. ADDED S1R8JNC10 & 11 IN SHEET 4. PER DCN# 22697	EMD	10/18/16

THE DESIGN AND DIMENSIONS OF THE PRODUCT SHOWN ON THIS DRAWING ARE SUBJECT TO CHANGE WITHOUT NOTICE. DIMENSIONS ARE IN INCHES [mm].

TITLE
BOTTOM JUNCTION BOXES, FIRE RATED POKE THRU, 8 INCH DIA.

WIRING DEVICE-KELLEMS
HUBBELL INCORPORATED
SHELTON, CT

TOLERANCES UNLESS OTHERWISE SPECIFIED
.XX = ± .01
.XXX= ± .005
ANGLE TOL. ±2°

DR. BY EMD | SCALE 1 / 2
CHK. BY | DATE 10/18/16

B
M-11989
7

SHEET 1 OF 5

CAGE CODE 74545

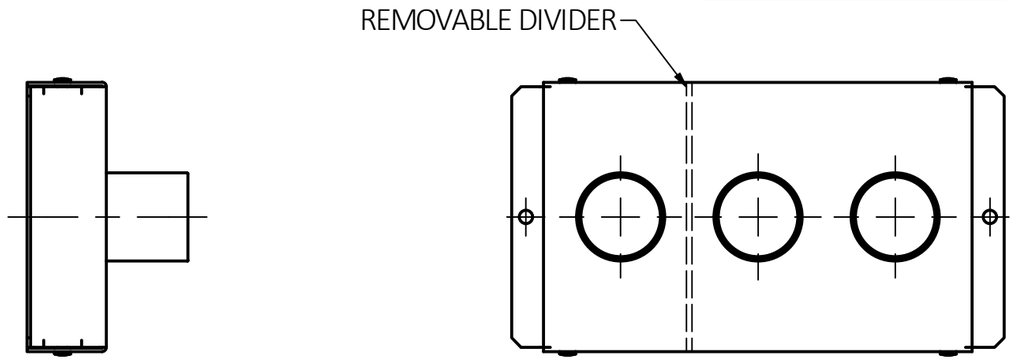

S1R8JNC4

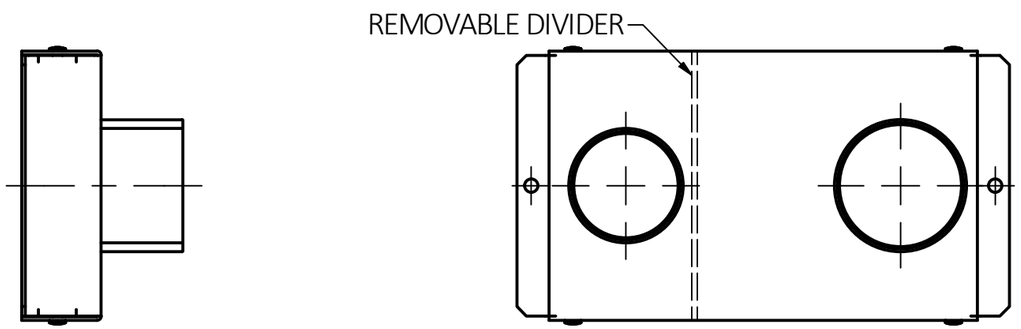

S1R8JNC5

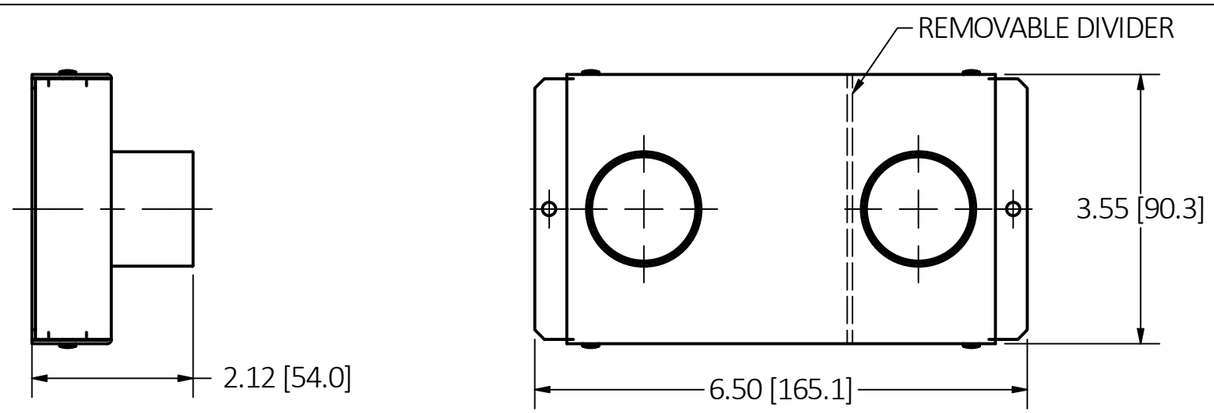

S1R8JNC6

CATALOG NUMBER	BOTTOM FEED CONDUIT SIZES
S1R8JNC4	(3) 1" EMT
S1R8JNC5	1-1/4" & 1-1/2" EMT
S1R8JNC6	(2) 1-1/4" EMT

NOTES:
1) ALL DIMENSIONS ARE IN INCHES AND [MILLIMETERS]
2) ALL DIMENSIONS ARE COMMON TO ALL CATALOG NUMBERS. BOTTOM FEED BOXES VARY AS SPECIFIED.
3) (2) MOUNTING SCREWS SHIPPED LOOSELY (NOT SHOWN).

LIST OF PARTS

DESCRIPTION	MATERIAL	FINISH
BOX WELDMENT	STEEL	ZINC PLATE
EMT TUBE	STEEL	ZINC PLATE
FIRE BARRIER	FIRE BAR. MATL.	NATURAL
MOUNTING SCREWS	STEEL	ZINC PLATE
DIVIDER	GALV. STEEL	

DIMENSION SHEET FOR CAT. NO.
SEE TABLE

REV	DESCRIPTION	APP	DATE
7	ADDED CATALOG NO. S1R8JNC13 AND VIEW TO SHEET 5. DCN200430105554	AD	4/30/20
6	ADDED CATALOG NO. S1R8JNC12 AND VIEW TO SHEET 4 OF 4 PER DCN# 22946.	EM MZ	3/7/17
5	REDRAWN IN INVENTOR. ADDED S1R8JNC10 & 11 IN SHEET 4. PER DCN# 22697	EMD	10/18/16

THE DESIGN AND DIMENSIONS OF THE PRODUCT SHOWN ON THIS DRAWING ARE SUBJECT TO CHANGE WITHOUT NOTICE. DIMENSIONS ARE IN INCHES [mm].

TITLE
BOTTOM JUNCTION BOXES, FIRE RATED POKE THRU, 8 INCH DIA.

WIRING DEVICE-KELLEMS
HUBBELL INCORPORATED
SHELTON, CT

TOLERANCES UNLESS OTHERWISE SPECIFIED
.XX = ± .01
.XXX= ± .005
ANGLE TOL. ±2'

DR. BY	EMD	SCALE	1 / 2
CHK. BY		DATE	10/18/16

B
M-11989
7

SHEET 2 OF 5

CAGE CODE 74545

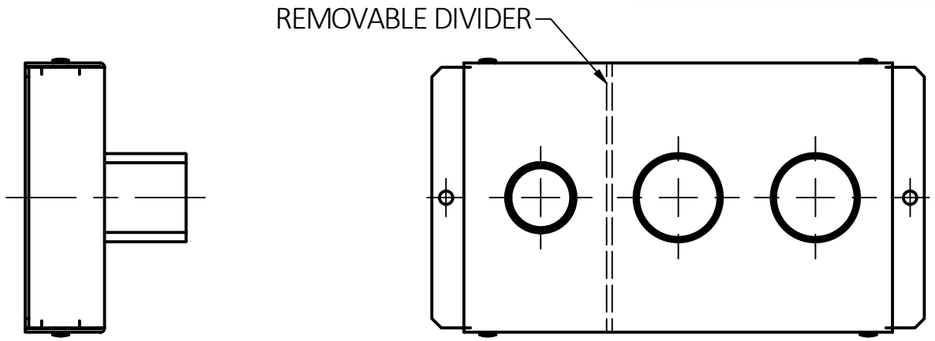

S1R8JNC7

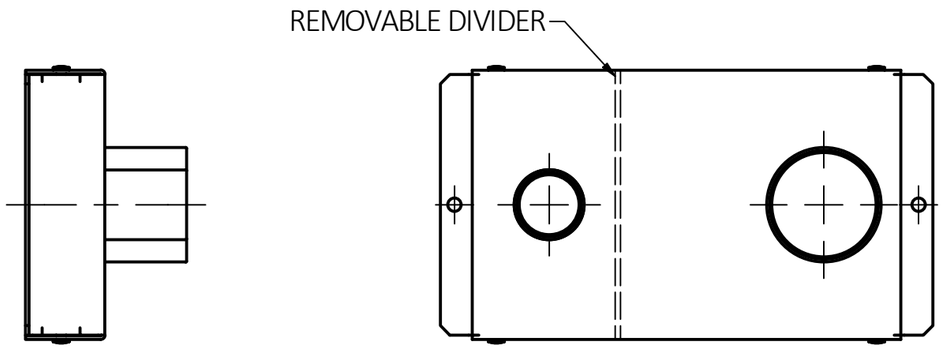

S1R8JNC8

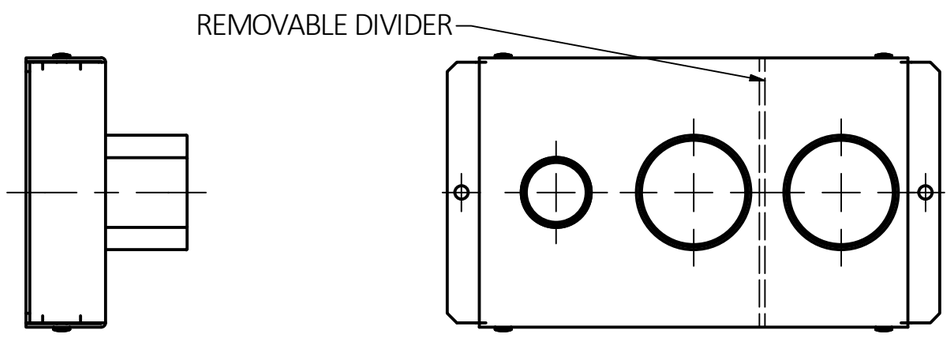

S1R8JNC9

CATALOG NUMBER	BOTTOM FEED CONDUIT SIZES
S1R8JNC7	3/4" & (2) 1" EMT
S1R8JNC8	3/4" & 1-1/4" EMT
S1R8JNC9	3/4" & (2) 1-1/4" EMT

NOTES:
1) ALL DIMENSIONS ARE IN INCHES AND [MILLIMETERS]
2) ALL DIMENSIONS ARE COMMON TO ALL CATALOG NUMBERS. BOTTOM FEED BOXES VARY AS SPECIFIED.
3) (2) MOUNTING SCREWS SHIPPED LOOSELY (NOT SHOWN).

LIST OF PARTS

DESCRIPTION	MATERIAL	FINISH
BOX WELDMENT	STEEL	ZINC PLATE
EMT TUBE	STEEL	ZINC PLATE
FIRE BARRIER	FIRE BAR. MATL.	NATURAL
MOUNTING SCREWS	STEEL	ZINC PLATE
DIVIDER	GALV. STEEL	

DIMENSION SHEET FOR CAT. NO.
SEE TABLE

REV	DESCRIPTION	APP	DATE
7	ADDED CATALOG NO. S1R8JNC13 AND VIEW TO SHEET 5. DCN200430105554	AD	4/30/20
6	ADDED CATALOG NO. S1R8JNC12 AND VIEW TO SHEET 4 OF 4 PER DCN# 22946.	EM MZ	3/7/17
5	REDRAWN IN INVENTOR. ADDED S1R8JNC10 & 11 IN SHEET 4. PER DCN# 22697	EMD	10/18/16

THE DESIGN AND DIMENSIONS OF THE PRODUCT SHOWN ON THIS DRAWING ARE SUBJECT TO CHANGE WITHOUT NOTICE. DIMENSIONS ARE IN INCHES [mm].

TITLE
BOTTOM JUNCTION BOXES, FIRE RATED POKE THRU, 8 INCH DIA.

WIRING DEVICE-KELLEMS
HUBBELL INCORPORATED
SHELTON, CT

TOLERANCES UNLESS OTHERWISE SPECIFIED
.XX = ± .01
.XXX= ± .005
ANGLE TOL. ±2°

DR. BY	EMD	SCALE	1 / 2
CHK. BY		DATE	10/18/16

B
M-11989
7

CAGE CODE 74545

M-11989 | 7

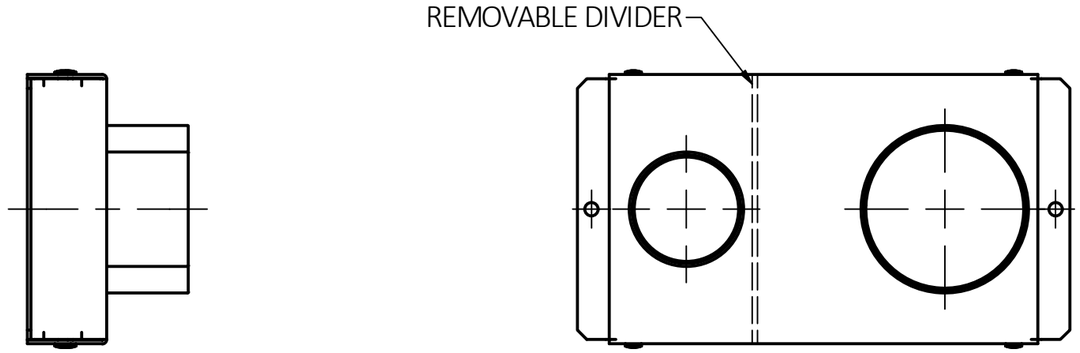

S1R8JNC10

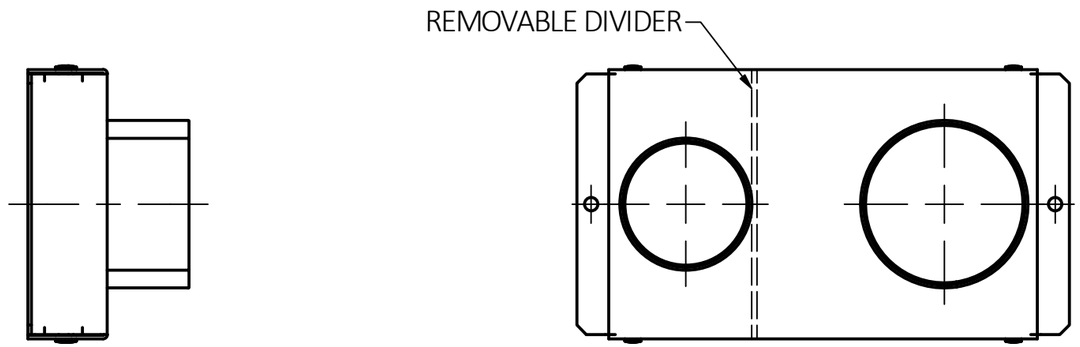

S1R8JNC11

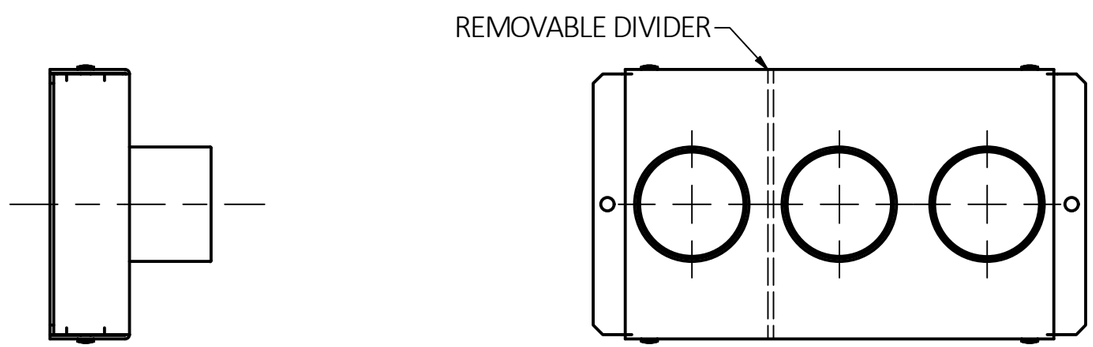

S1R8JNC12

CATALOG NUMBER	BOTTOM FEED CONDUIT SIZES
S1R8JNC10	1-1/4" & 2" EMT
S1R8JNC11	1-1/2" & 2" EMT
S1R8JNC12	(3) 1-1/4" EMT

NOTES:
1) ALL DIMENSIONS ARE IN INCHES AND [MILLIMETERS]
2) ALL DIMENSIONS ARE COMMON TO ALL CATALOG NUMBERS. BOTTOM FEED BOXES VARY AS SPECIFIED.
3) (2) MOUNTING SCREWS SHIPPED LOOSELY (NOT SHOWN).

SHEET 4 OF 5

CAGE CODE 74545

LIST OF PARTS

DESCRIPTION	MATERIAL	FINISH
BOX WELDMENT	STEEL	ZINC PLATE
EMT TUBE	STEEL	ZINC PLATE
FIRE BARRIER	FIRE BAR. MATL.	NATURAL
MOUNTING SCREWS	STEEL	ZINC PLATE
DIVIDER	GALV. STEEL	

REV	DESCRIPTION	APP	DATE
7	ADDED CATALOG NO. S1R8JNC13 AND VIEW TO SHEET 5. DCN200430105554	AD	4/30/20
6	ADDED CATALOG NO. S1R8JNC12 AND VIEW TO SHEET 4 OF 4 PER DCN# 22946.	EM MZ	3/7/17
5	REDRAWN IN INVENTOR. ADDED S1R8JNC10 & 11 IN SHEET 4. PER DCN# 22697	EMD	10/18/16

THE DESIGN AND DIMENSIONS OF THE PRODUCT SHOWN ON THIS DRAWING ARE SUBJECT TO CHANGE WITHOUT NOTICE. DIMENSIONS ARE IN INCHES [mm].

TITLE

BOTTOM JUNCTION BOXES, FIRE RATED POKE THRU, 8 INCH DIA.

WIRING DEVICE-KELLEMS
HUBBELL INCORPORATED
SHELTON, CT

TOLERANCES UNLESS OTHERWISE SPECIFIED
.XX = ± .01
.XXX= ± .005
ANGLE TOL. ±2°

DR. BY EMD | SCALE 1 / 2
CHK. BY | DATE 10/18/16

DIMENSION SHEET FOR CAT. NO.
SEE TABLE

B

M-11989

7

M-11989 | 7

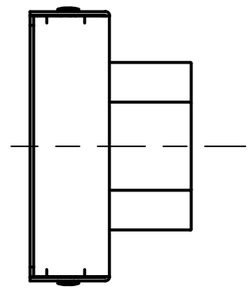

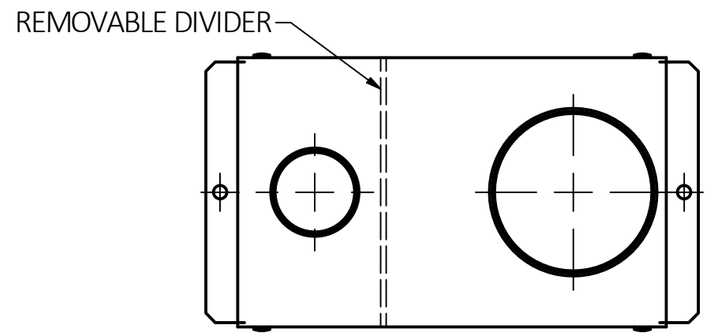

S1R8JNC13

CATALOG NUMBER	BOTTOM FEED CONDUIT SIZES
S1R8JNC13	1" & 2" EMT

NOTES:
1) ALL DIMENSIONS ARE IN INCHES AND [MILLIMETERS]
2) ALL DIMENSIONS ARE COMMON TO ALL CATALOG NUMBERS. BOTTOM FEED BOXES VARY AS SPECIFIED.
3) (2) MOUNTING SCREWS SHIPPED LOOSELY (NOT SHOWN).

SHEET 5 OF 5

CAGE CODE 74545

LIST OF PARTS

DESCRIPTION	MATERIAL	FINISH
BOX WELDMENT	STEEL	ZINC PLATE
EMT TUBE	STEEL	ZINC PLATE
FIRE BARRIER	FIRE BAR. MATL.	NATURAL
MOUNTING SCREWS	STEEL	ZINC PLATE
DIVIDER	GALV. STEEL	

REV	DESCRIPTION	APP	DATE
7	ADDED CATALOG NO. S1R8JNC13 AND VIEW TO SHEET 5. DCN200430105554	AD	4/30/20
6	ADDED CATALOG NO. S1R8JNC12 AND VIEW TO SHEET 4 OF 4 PER DCN# 22946.	EM MZ	3/7/17
5	REDRAWN IN INVENTOR. ADDED S1R8JNC10 & 11 IN SHEET 4. PER DCN# 22697	EMD	10/18/16

THE DESIGN AND DIMENSIONS OF THE PRODUCT SHOWN ON THIS DRAWING ARE SUBJECT TO CHANGE WITHOUT NOTICE. DIMENSIONS ARE IN INCHES [mm].

TITLE

BOTTOM JUNCTION BOXES, FIRE RATED POKE THRU, 8 INCH DIA.

WIRING DEVICE-KELLEMS
HUBBELL INCORPORATED
SHELTON, CT

TOLERANCES UNLESS OTHERWISE SPECIFIED
.XX = ± .01
.XXX= ± .005
ANGLE TOL. ±2°

DR. BY EMD
CHK. BY
SCALE 1 / 2
DATE 10/18/16

DIMENSION SHEET FOR CAT. NO.
SEE TABLE

B

M-11989

7