M-14142 | 2

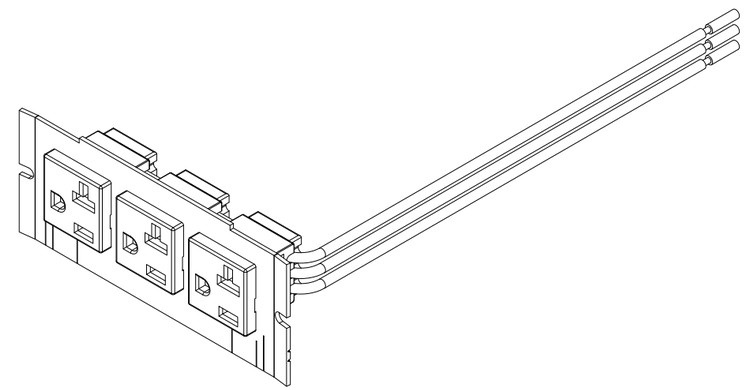

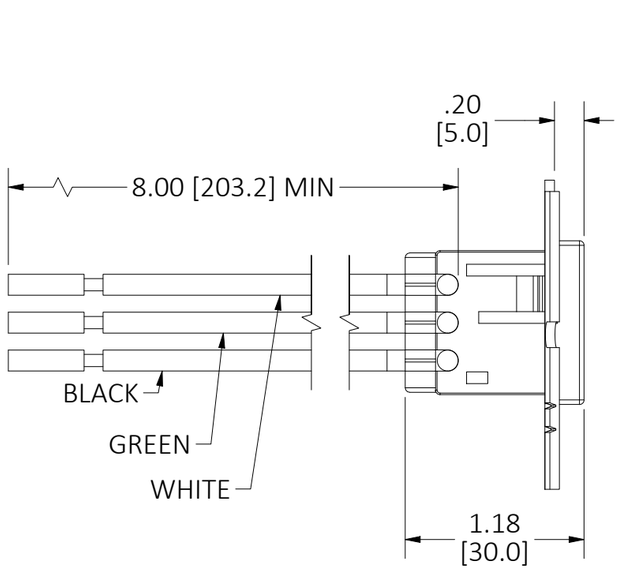

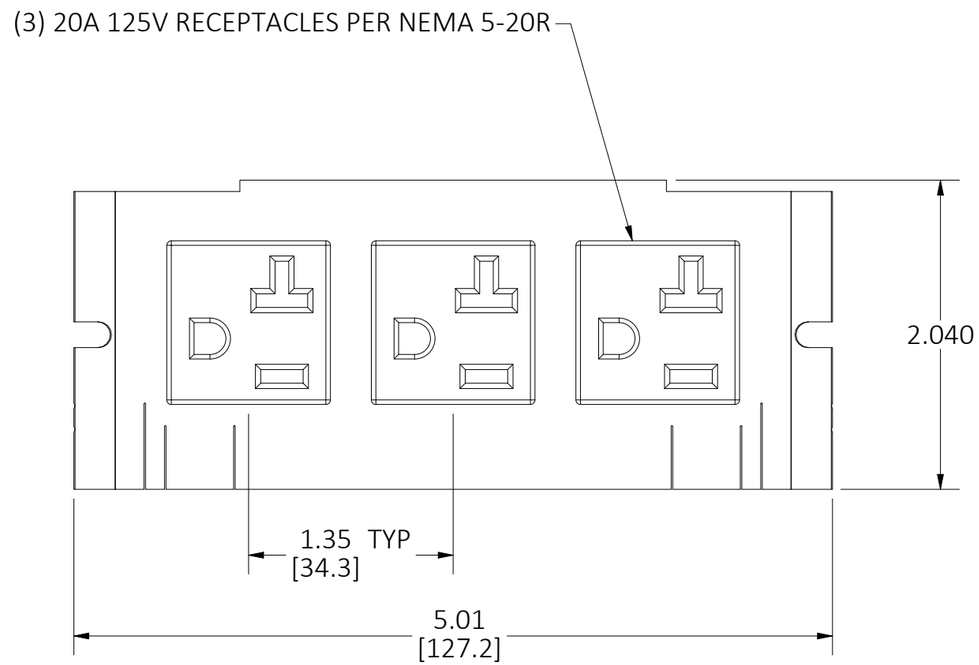

NOTES:
1. ALL DIMENSIONS ARE IN INCHES AND [MILLIMETERS].
2. PWFBMP3RC RECEPTACLES ARE MARKED "CONTROLLED".
3. FASTENERS INCLUDED, NOT SHOWN.
4. PRODUCT IS cULus LISTED.

CAGE CODE 74545

LIST OF PARTS

DESCRIPTION	MATERIAL	FINISH
PLATE	STEEL	PRE-GALVANIZED
RECEPTACLE	THERMOPLASTIC	BLACK
CONTACTS	COPPER ALLOY	NONE
COPPER WIRE	SOLID 12 AWG	SEE FIELD
FASTENERS	STEEL	ZINC

REV	DESCRIPTION	APP	DATE
2	UPDATED DRAWING PER EC 210622009419	SBW	6/22/2021
1	ORIGINAL RELEASE PER EC 200917000629	SBW	9/21/2020

THE DESIGN AND DIMENSIONS OF THE PRODUCT SHOWN ON THIS DRAWING ARE SUBJECT TO CHANGE WITHOUT NOTICE. DIMENSIONS ARE IN INCHES [mm].

TITLE

PRE-WIRED 2-4-6 GANG MOUNTING PLATE, THREE RECEPTACLE

WIRING DEVICE-KELLEMS
HUBBELL INCORPORATED
SHELTON, CT

TOLERANCES UNLESS OTHERWISE SPECIFIED
.XX = ± .01
.XXX= ± .005
ANGLE TOL. ±2°

DR. BY	SBW	SCALE	1 : 1
CHK. BY		DATE	9/17/2020

DIMENSION SHEET FOR CAT. NO.
PWFBMP3R, PWFBMP3RC

B

M-14142

2