M-14153 | 1

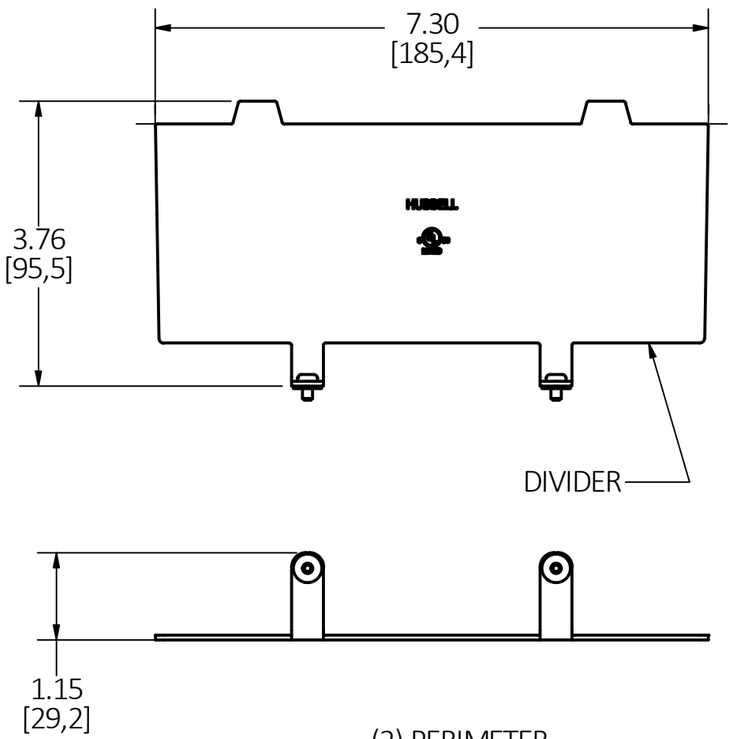

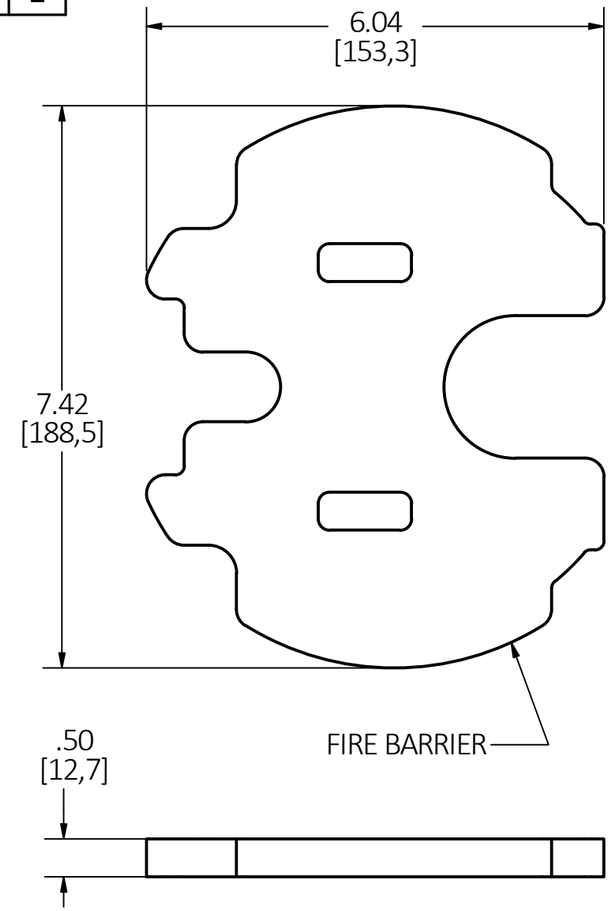

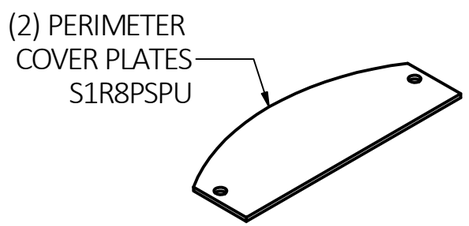

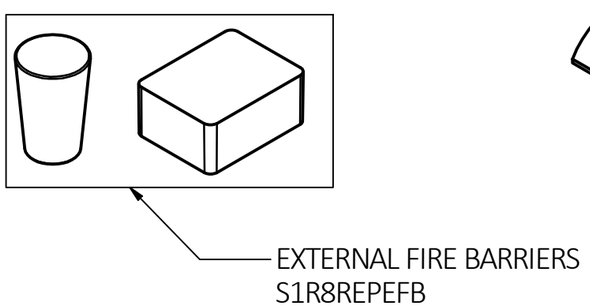

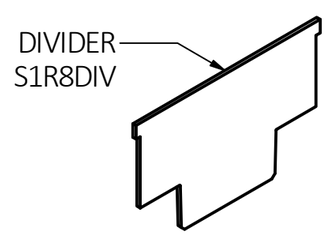

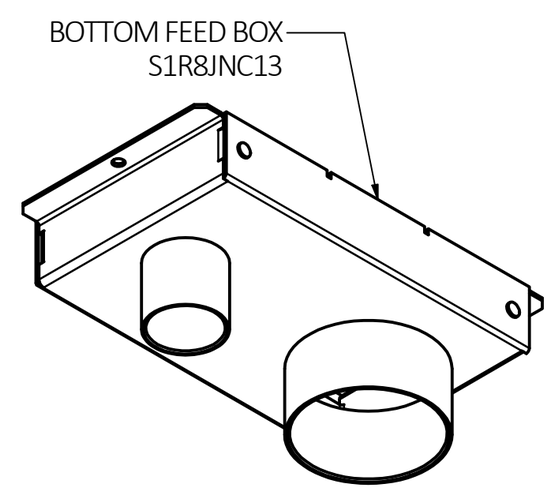

NOTES:
1. ALL DIMENSIONS ARE IN INCHES AND [MILLIMETERS].
2. KIT SHIPS WITH DIVIDER S1R8DIV. SEE M-11921 FOR DIMENSIONS.
3. KIT SHIPS WITH (2) PERIMETER COVER PLATES S1R8PSPU. SEE M-11918 FOR DIMENSIONS.
4. KIT SHIPS WITH BOTTOM FEED BOX S1R8JNC13. SEE M-11989 FOR DIMENSIONS.
5. KIT SHIPS WITH EXTERNAL FIRE BARRIERS S1R8REPEFB. SEE M-14152 FOR DIMENSIONS.

LIST OF PARTS

DESCRIPTION	MATERIAL	FINISH
DIVIDERS	STEEL	GALVANIZED
SCREWS	STEEL	ZINC PLATE
WASHER	FIBER	RED
FIRE BARRIER	FIRE BAR. MATL.	GRAY
EXT. FIRE BARRIERS	FIRE BAR. MATL.	RED
COVER PLATES	STEEL	GALVANIZED/ WHITE
BOTTOM FEED BOX	STEEL	GALVANIZED

REV	DESCRIPTION	APP	DATE
1	RELEASED PER DCN200430105554	AD	4/30/20

THE DESIGN AND DIMENSIONS OF THE PRODUCT SHOWN ON THIS DRAWING ARE SUBJECT TO CHANGE WITHOUT NOTICE. DIMENSIONS ARE IN INCHES [mm].

TITLE

FURNITURE FEED COMPONENT KIT, 8 INCH FRPT

WIRING DEVICE-KELLEMS
HUBBELL INCORPORATED
SHELTON, CT

TOLERANCES UNLESS OTHERWISE SPECIFIED
.XX = ± .01
.XXX= ± .005
ANGLE TOL. ±2°

DR. BY AD | SCALE 1 / 2
CHK. BY | DATE 8/23/19

DIMENSION SHEET FOR CAT. NO.
S1R8PTFFCOMPKIT

B

M-14153

1

CAGE CODE 74545