M-14258 | 1

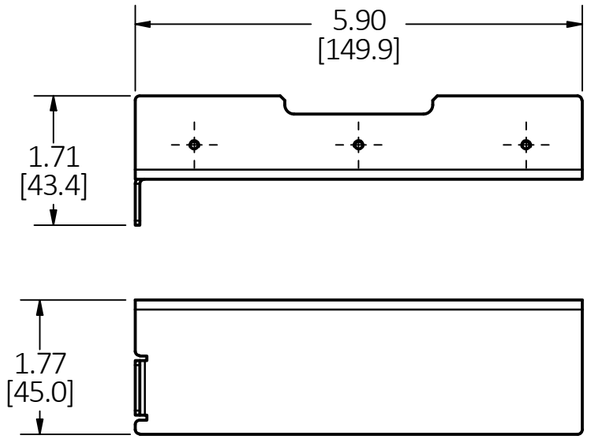

VERTICAL DIVIDER

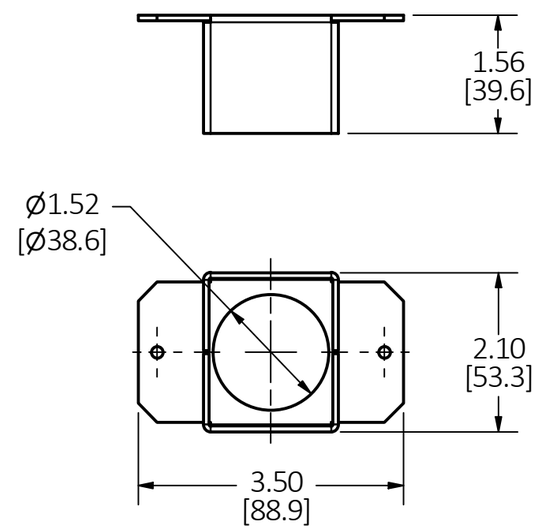

COVER WIREWAY

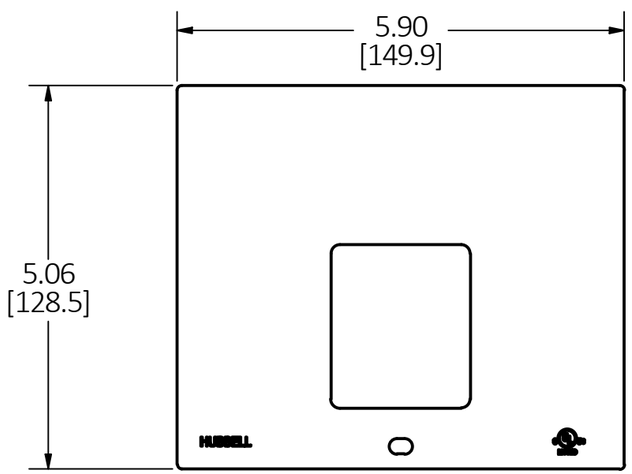

TOP DIVIDER

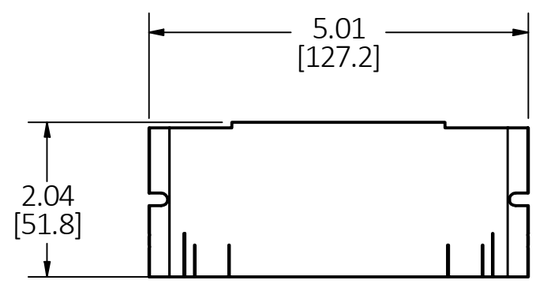

FACE PLATE
(2) SUPPLIED

NOTES:
1. ALL DIMENSIONS ARE IN INCHES AND [MILLIMETERS].
2. PRODUCT IS cULus LISTED.
3. SUPPLIED WITH MOUNTING SCREWS (NOT SHOWN).

CAGE CODE 74545

LIST OF PARTS

DESCRIPTION	MATERIAL	FINISH
DIVIDERS	STEEL	GALVANIZED
COVER WIREWAY	STEEL	GALVANIZED
FACE PLATE	STEEL	GALVANIZED
SCREWS	STEEL	ZINC PLATE

REV	DESCRIPTION	APP	DATE
1	RELEASED PER DCN200813110246	AD	8/13/20

THE DESIGN AND DIMENSIONS OF THE PRODUCT SHOWN ON THIS DRAWING ARE SUBJECT TO CHANGE WITHOUT NOTICE. DIMENSIONS ARE IN INCHES [mm].

TITLE

DIVIDER KIT, 8 INCH FURNITURE FEED, ROUND COVER, 4 GANG CFB

WIRING DEVICE-KELLEMS
HUBBELL INCORPORATED
SHELTON, CT

TOLERANCES UNLESS OTHERWISE SPECIFIED
.XX = ± .01
.XXX= ± .005
ANGLE TOL. ±2°

DR. BY	AD	SCALE	1 / 2
CHK. BY		DATE	7/16/20

DIMENSION SHEET FOR CAT. NO.
CFBS1R8FF4GDIVKIT

B

M-14258

1