M-14492 | 1

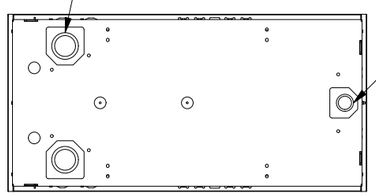

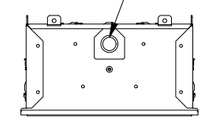

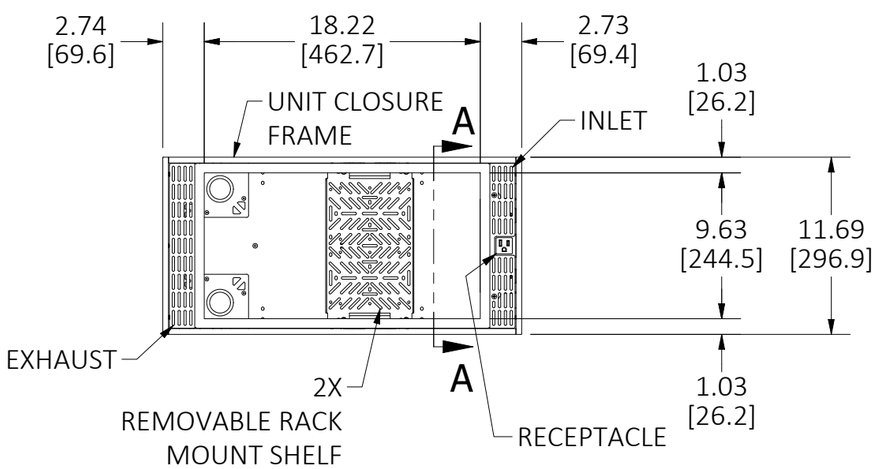

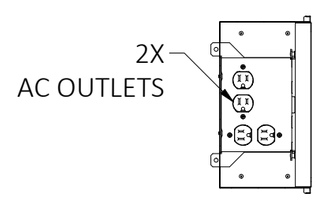

SECTION A-A

NOTES:
1. ALL DIMENSIONS ARE IN INCHES AND [MILLIMETERS].
2. COMPLIES WITH UL 62368-1.
3. COMPATIBLE WITH HRCB12HCFK HARD CEILING FRAME KIT.
4. REFERENCE INSTALLATION INSTRUCTION, PD-3027.

CAGE CODE 74545

LIST OF PARTS

DESCRIPTION	MATERIAL	FINISH
BOX	STEEL	PAINTED
SIDE COVERS	STEEL	PAINTED
UNIT CLOSURE FRAME	STEEL	PAINTED
REMOVABLE RACKS	ALUMINUM	NONE
RACK MOUNTS	ALUMINUM	NONE
BRACKETS	STEEL	ZINC
AC OUTLET UNIT	STEEL	ZINC

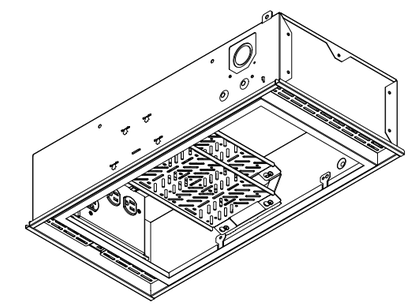

ISOMETRIC VIEW

REV	DESCRIPTION	APP	DATE
1	DRAWING RELEASE PER EC 230412029420 TRS	SW	04/11/23

THE DESIGN AND DIMENSIONS OF THE PRODUCT SHOWN ON THIS DRAWING ARE SUBJECT TO CHANGE WITHOUT NOTICE. DIMENSIONS ARE IN INCHES [mm].

TITLE

RECESSED CEILING BOX, 1' X 2', WHT

WIRING DEVICE-KELLEMS
HUBBELL INCORPORATED
SHELTON, CT

TOLERANCES UNLESS OTHERWISE SPECIFIED
.XX = ± .01
.XXX= ± .005
ANGLE TOL. ±2'

DR. BY	VKK/TS	SCALE	1 : 10
CHK. BY	SW	DATE	12/24/21

DIMENSION SHEET FOR CAT. NO.
HRCB12WHT

B

M-14492

1