M-14631 | 1

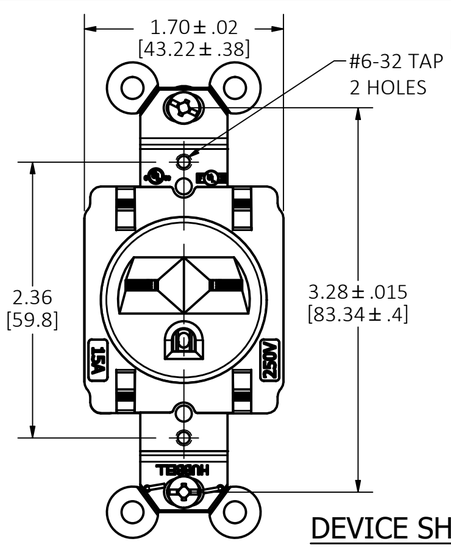

DEVICE SHOWN
FINDER FACE 15A 250V

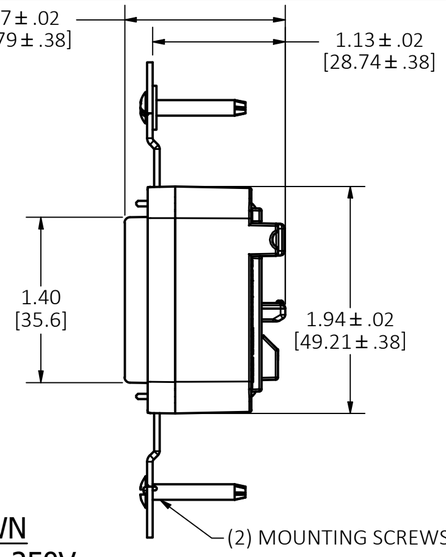

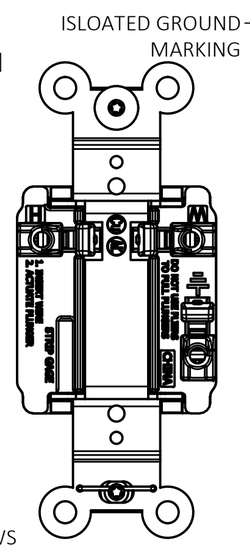

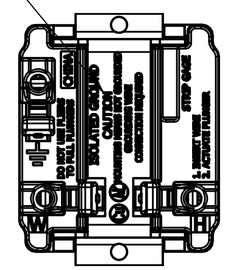

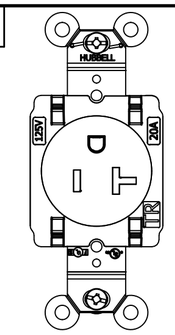

DEVICE SHOWN
TAMPER RESISTANT 20A 125V

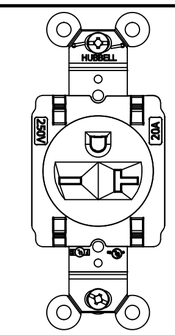

DEVICE SHOWN
FINDER FACE 20A 250V

GREEN DOT HOSPITAL
GRADE ONLY

TRIANGLE SYMBOL
ON ISOLATED
GROUND ONLY

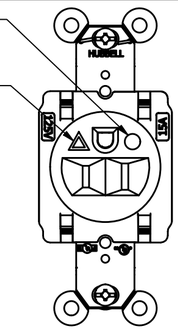

DEVICE SHOWN
ISOLATED GROUND/HOSPITAL GRADE

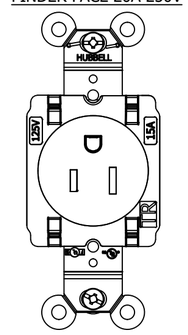

DEVICE SHOWN
TAMPER RESISTANT 15A 125V

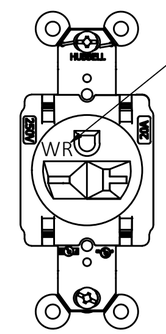

(WR) WEATHER RESISTANT
GRADE ONLY LOCATION
APPROXIMATE

DEVICE SHOWN
WEATHER RESISTANT

HUBBELL CATALOG NUMBERS						
APPLICATION	CONFIGURATION	BROWN	BLACK	BLUE	GRAY	GREEN
15A STANDARD	15A/125V	HBL5261ST	HBL5261STBK	HBL5261STBL	HBL5261STGY	HBL5261STGN
15A STD TR	15A/125V	HBL5261STTR	HBL5261STBKTR	HBL5261STBLTR	HBL5261STGYTR	HBL5261STGNTR
15A STD WR	15A/125V	HBL5261STWR	HBL5261STBKWR	HBL5261STBLWR	HBL5261STGYWR	HBL5261STGNWR
15A STD TR WR	15A/125V	HBL5261STWRTR	HBL5261STBKWRTR	HBL5261STBLWRTR	HBL5261STGYWRTR	HBL5261STGNWRTR
15A STD HG	15A/125V	HBL8210ST	HBL8210STBK	HBL8210STBL	HBL8210STGY	HBL8210STGN
15A STD TR HG	15A/125V	HBL8210STTR	HBL8210STBKTR	HBL8210STBLTR	HBL8210STGYTR	HBL8210STGNTR
15A STANDARD	15A/250V	HBL5661ST	HBL5661STBK	HBL5661STBL	HBL5661STGY	HBL5661STGN
15A STD TR	15A/250V	HBL5661STTR	HBL5661STBKTR	HBL5661STBLTR	HBL5661STGYTR	HBL5661STGNTR
20A STD TR	15A/250V	HBL5461STTR	HBL5461STBKTR	HBL5461STBLTR	HBL5461STGYTR	HBL5461STGNTR
20A STANDARD	20A/125V	HBL5361ST	HBL5361STBK	HBL5361STBL	HBL5361STGY	HBL5361STGN
20A STD TR	20A/125V	HBL5361STTR	HBL5361STBKTR	HBL5361STBLTR	HBL5361STGYTR	HBL5361STGNTR
20A STD WR	20A/125V	HBL5361STWR	HBL5361STBKWR	HBL5361STBLWR	HBL5361STGYWR	HBL5361STGNWR
20A STD TR WR	20A/125V	HBL5361STWRTR	HBL5361STBKWRTR	HBL5361STBLWRTR	HBL5361STGYWRTR	HBL5361STGNWRTR
20A STD HG	20A/125V	HBL8310ST	HBL8310STBL	HBL8310STBL	HBL8310STGY	HBL8310STGN
20A STD TR HG	20A/125V	HBL8310STTR	HBL8310STBKTR	HBL8310STBLTR	HBL8310STGYTR	HBL8310STGNTR
20A STANDARD	20A/250V	HBL5461ST	HBL5461ST10BK	HBL5461STBL	HBL5461STGY	HBL5461STGN

HUBBELL CATALOG NUMBERS						
APPLICATION	CONFIGURATION	IVORY	LT. ALMOND	ORANGE	RED	WHITE
15A STANDARD	15A/125V	HBL5261STI	HBL5261STLA	HBL5261STO	HBL5261STR	HBL5261STW
15A STD TR	15A/125V	HBL5261STITR	HBL5261STLATR	HBL5261STOTR	HBL5261STRTR	HBL5261STWTR
15A STD WR	15A/125V	HBL5261STIWR	HBL5261STLAWR	HBL5261STOWR	HBL5261SWRWR	HBL5261STWWR
15A STD TR WR	15A/125V	HBL5261STIWRTR	HBL5261STLAWRTR	HBL5261STOWRTR	HBL5261STRWRTR	HBL5261STWWRTR
15A STD HG	15A/125V	HBL8210STI	HBL8210STLA	HBL8210STO	HBL8210STR	HBL8210STW
15A STD TR HG	15A/125V	HBL8210STITR	HBL8210STLATR	HBL8210STOTR	HBL8210STRTR	HBL8210STWTR
15A STANDARD	15A/250V	HBL5661STI	HBL5661STLA	HBL5661STO	HBL5661STR	HBL5661STW
15A STD TR	15A/250V	HBL5661STITR	HBL5661STLATR	HBL5661STOTR	HBL5661STRTR	HBL5661STWTR
20A STD TR	15A/250V	HBL5461STITR	HBL5461STLATR	HBL5461STOTR	HBL5461STRTR	HBL5461STWTR
20A STANDARD	20A/125V	HBL5361STI	HBL5361STLA	HBL5361STO	HBL5361STR	HBL5361STW
20A STD TR	20A/125V	HBL5361STITR	HBL5361STLATR	HBL5361STOTR	HBL5361STRTR	HBL5361STWTR
20A STD WR	20A/125V	HBL5361STIWR	HBL5361STLAWR	HBL5361STOWR	HBL5361STRWR	HBL5361STWWR
20A STD TR WR	20A/125V	HBL5361STIWRTR	HBL5361STLAWRTR	HBL5361STOWRTR	HBL5361STRWRTR	HBL5361STWWRTR
20A STD HG	20A/125V	HBL8310STI	HBL8310STLA	HBL8310STO	HBL8310STR	HBL8310STW
20A STD TR HG	20A/125V	HBL8310STITR	HBL8310STLATR	HBL8310STOTR	HBL8310STRTR	HBL8310STWTR
20A STANDARD	20A/250V	HBL5461STI	HBL5461STLA	HBL5461STO	HBL5461STR	HBL5461STW

HUBBELL CATALOG NUMBERS		
APPLICATION	CONFIGURATION	ORANGE
ISO GND	15A/125V	IG5261ST
IG WR	15A/125V	IG5261STWR
ISO GND	20A/125V	IG5361ST
IG WR	20A/125V	IG5361STWR
IG HG	15A/125V	IG8210ST
IG HG	20A/125V	IG8310ST

CONFIGURATION	NEMA	RATING
	5-15R	15A 125V
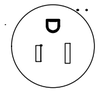	6-15R	15A 250V
	5-20R	20A 125V
	6-20R	20A 250V

GENERAL NOTES:

1. DIMENSIONS ARE IN INCHES [MM].
2. ALL DEVICES UL LISTED, CSA & FED. SPEC. CERTIFIED
3. CHART KEY TR (TAMPER RESISTENT), WR (WEATHER RESISTENT), HG (HOSPTIAL GRADE), AND IG (ISOLATED GROUND)

CAGE CODE 74545

LIST OF PARTS		
DESCRIPTION	MATERIAL	FINISH
TOP COVER	PLASTIC	
TR ASSEMBLY	ACETAL/SS	
LOWER HOUSING	PLASTIC	
BRIDGE	STEEL	
GROUND CONTACT	COPPER ALLOY	
LINE CONTACTS	COPPER ALLOY	
PLUNGER	NYLON	
SPRING	STAINLESS STEEL	
STAPLE	STAINLESS STEEL	
WASHER	PVC FILM	BLACK
MOUNTING SCREW	STEEL	ZINC PLATE
TR ADAPTER	PLASTIC	
INSULATOR	PLASTIC	

DIMENSION SHEET FOR CAT. NO.
SEE TABLES

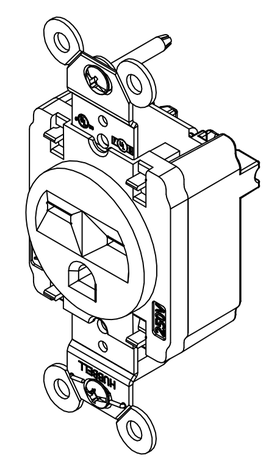

ISOMETRIC VIEW

REV	DESCRIPTION	APP	DATE
1	INITIAL DRAWING RELEASE AS PER EC 230807032387 PS	JPQ	08/09/23

THE DESIGN AND DIMENSIONS OF THE PRODUCT SHOWN ON THIS DRAWING ARE SUBJECT TO CHANGE WITHOUT NOTICE. DIMENSIONS ARE IN INCHES [mm].

TITLE
EDGE, SINGLE, STRAIGHT BLADE, RECEPTACLE

WIRING DEVICE-KELLEMS
HUBBELL INCORPORATED
SHELTON, CT

TOLERANCES UNLESS OTHERWISE SPECIFIED
.XX = ± .01
.XXX= ± .005
ANGLE TOL. ±2°

DR. BY PS | SCALE 1 : 1
CHK. BY JPQ | DATE 05/29/23

B
M-14631
1