M-14665 | 1

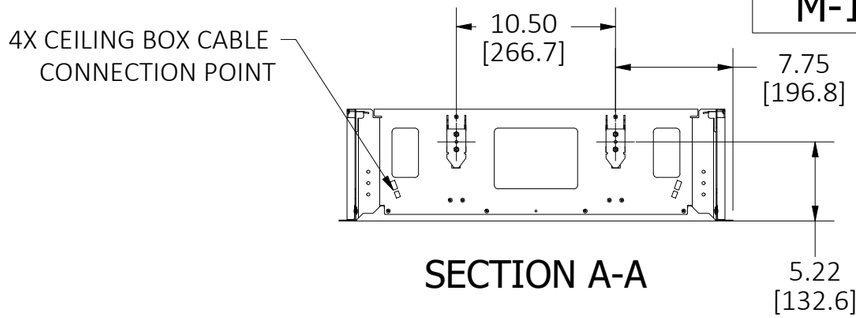

SECTION A-A

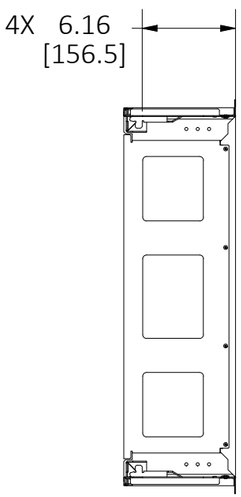

SECTION B-B

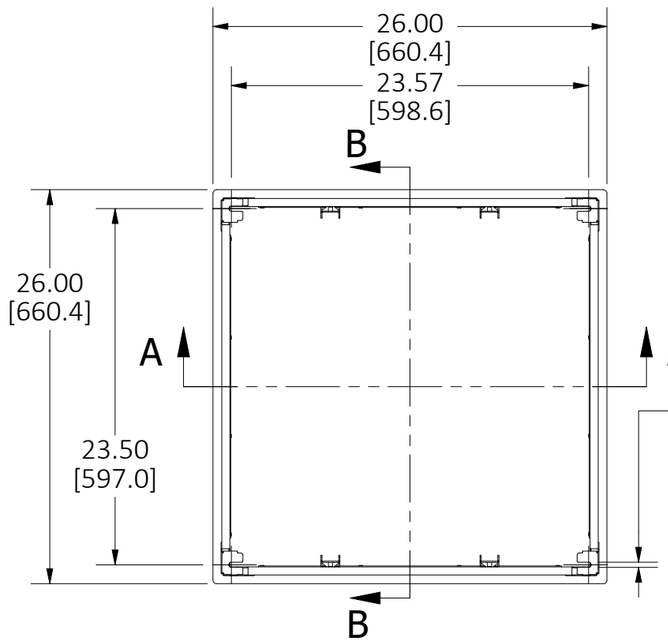

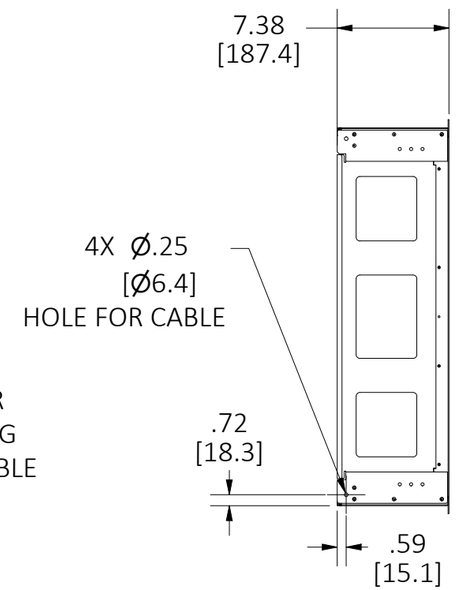

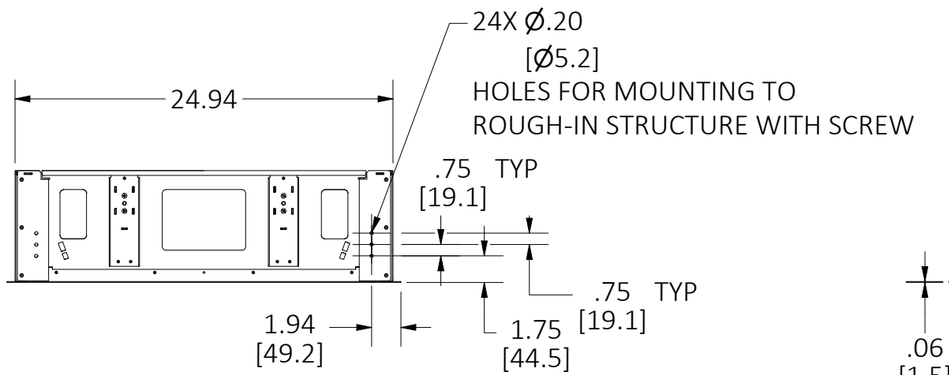

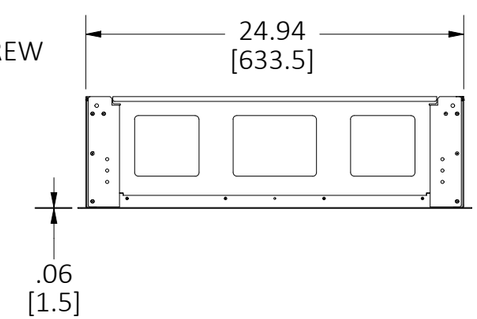

NOTES:
1. ALL DIMENSIONS ARE IN INCHES AND [MILLIMETERS].
2. ROUGH OPENING SIZE 25" X 25" +/- 1/16".
3. COMPATIBLE WITH 2' X 2' RECESSED CEILING BOXES, HRCB22WHT & HRCB22PWHT.
4. CAN BE INSTALLED USING AVAILABLE CABLE OR THREADED ROD MOUNTING KITS: HRCBMNT1 OR HRCBTHRD.
5. REFERENCE INSTALLATION INSTRUCTION PD-3035.

CAGE CODE 74545

LIST OF PARTS

DESCRIPTION	MATERIAL	FINISH
FRAME	STEEL	ZINC
LOCK PINS	STEEL	ZINC
INNER BRACKET	STEEL	ZINC
OUTER BRACKET	STEEL	ZINC
FASTENERS	STEEL	ZINC
LABELS	PLASTIC/POLYESTER	N/A

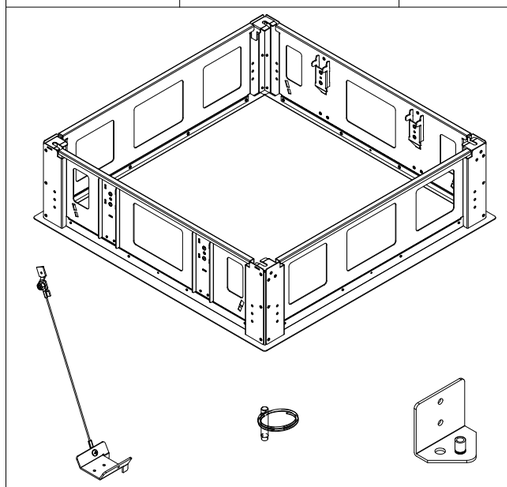

ISOMETRIC VIEW

REV	DESCRIPTION	APP	DATE
1	DRAWING RELEASE PER EC 230412029420 TRS		04/11/23

THE DESIGN AND DIMENSIONS OF THE PRODUCT SHOWN ON THIS DRAWING ARE SUBJECT TO CHANGE WITHOUT NOTICE. DIMENSIONS ARE IN INCHES [mm].

TITLE

HRCB22 HARD CEILING FRAME KIT

WIRING DEVICE-KELLEMS
HUBBELL INCORPORATED
SHELTON, CT

TOLERANCES UNLESS OTHERWISE SPECIFIED
.XX = ± .01
.XXX= ± .005
ANGLE TOL. ±2'

DR. BY	DRM/TS	SCALE	1 / 10
CHK. BY	SW	DATE	02/22/23

DIMENSION SHEET FOR CAT. NO.
HRCB22HCFK

B

M-14665

1