M-14806 | 1

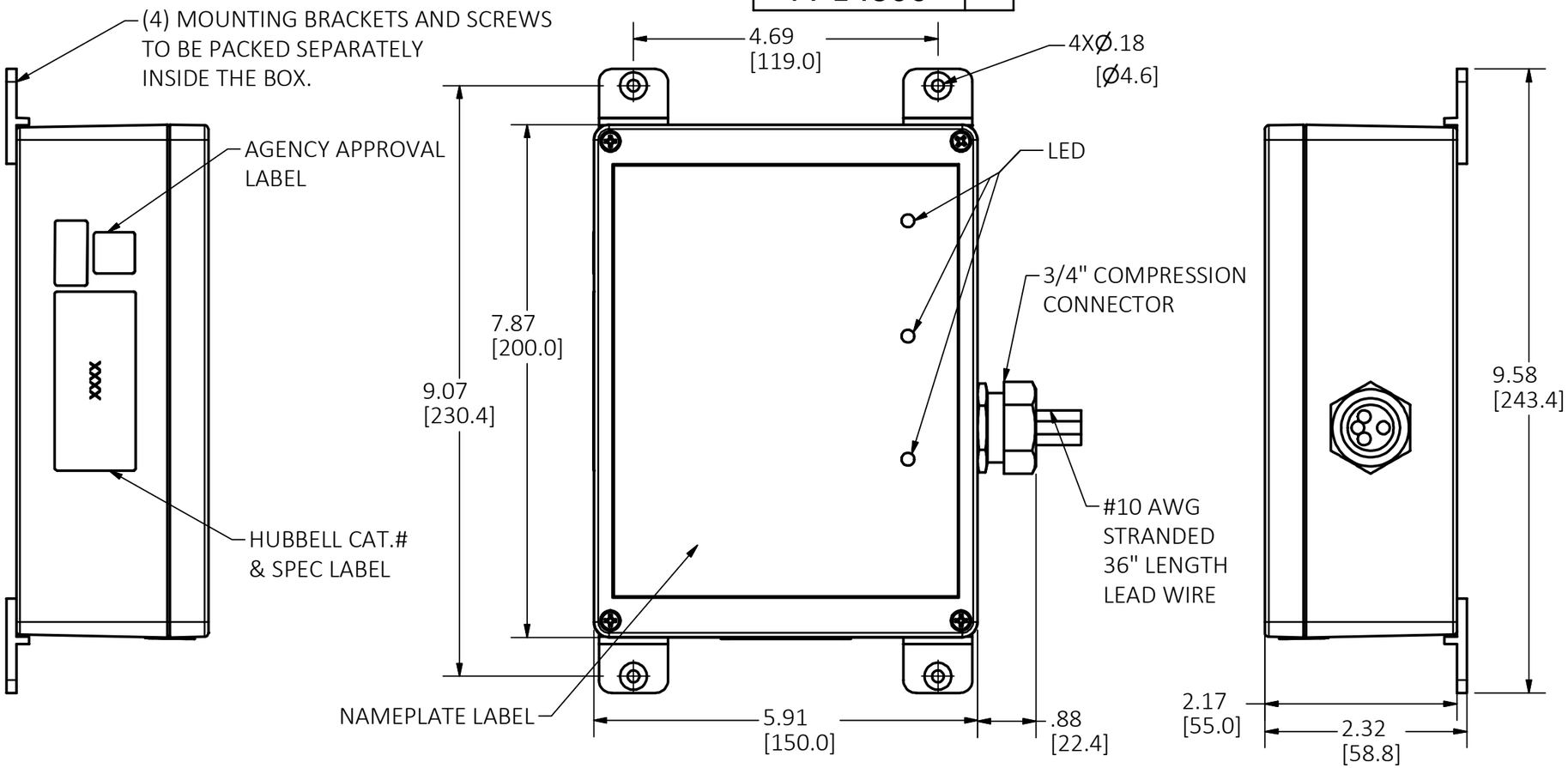

LIST OF PARTS		
DESCRIPTION	MATERIAL	FINISH
ENCLOSURE	THERMOPLASTIC	PAINTED
LOCK NUT	STEEL	Zn PLATE
MOUNTING BRACKET	THERMOPLASTIC	
SCREW	STEEL	Zn PLATE

DIMENSION SHEET FOR CAT. NO.
SEE TABLE

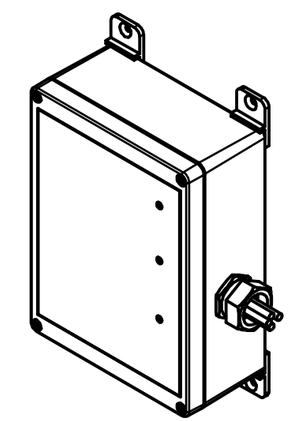

CAT. No.	DESCRIPTION	RATED VOLTAGE	CIRCUIT CONFIGURATION	SHORT CIRCUIT CURRENT RATING (SCCR)	NOMINAL DISCHARGE CURRENT PER MODE [8/20 µS IMPULSED] (In)
HBL3P105NM	SPD 105KA 120/240 VAC SPLIT PH, NM ENC	120/240VAC	SPLIT 2PH+N+G	200KA	20KA
HBL4P105NM	SPD 105KA 120/208 VAC WYE 3PH, NM ENC	120/208VAC	WYE 3PH+N+G	150KA	20KA
HBL5P105NM	SPD 105KA 240 VAC DELTA 3PH, NM ENC	240VAC	DELTA 3PH+G	150KA	20KA
HBL6P105NM	SPD 105KA 120/120/240 VAC DELTA SPLIT 3PH, NM ENC	120/120/240VAC	Hi-LEG DELTA 3PH+N+G	150KA	20KA
HBL8P105NM	SPD 105KA 277/480 VAC WYE 3PH, NM ENC	277/480VAC	WYE 3PH+N+G	150KA	20KA
HBL9P105NM	SPD 105KA 480 VAC DELTA 3PH, NM ENC	480VAC	DELTA 3PH+G	150KA	20KA
HBL3P132NM	SPD 132KA 120/240 VAC SPLIT PH, NM ENC	120/240VAC	SPLIT 2PH+N+G	200KA	20KA
HBL4P132NM	SPD 132KA 120/208 VAC WYE 3PH, NM ENC	120/208VAC	WYE 3PH+N+G	150KA	20KA
HBL5P132NM	SPD 132KA 240 VAC DELTA 3PH, NM ENC	240VAC	DELTA 3PH+G	150KA	20KA
HBL6P132NM	SPD 132KA 120/120/240 VAC DELTAT SPLIT 3PH, NM ENC	120/120/240VAC	Hi-LEG DELTA 3PH+N+G	150KA	20KA
HBL8P132NM	SPD 132KA 277/480 VAC WYE 3PH, NM ENC	277/480VAC	WYE 3PH+N+G	150KA	20KA
HBL9P132NM	SPD 132KA 480 VAC DELTA 3PH, NM ENC	480VAC	DELTA 3PH+G	150KA	20KA
HBL10P132NM	SPD 132KA 347/600 VAC WYE 3PH, NM ENC	347/600VAC	WYE 3PH+N+G	200KA	20KA

NOTES:
1. ALL DIMENSIONS ARE IN INCHES [mm].
2. SPD TYPE 1, UL LISTED; SPD TYPE 2, c-UL CERTIFICATED.
3. ENVIRONMENTAL RATING: IP66/NEMA 4X.
4. OPERATING TEMPERATURE: -40/85 °C [-40/185 °F].

CAGE CODE 74545

REV	DESCRIPTION	APP	DATE
1	INITIAL RELEASE PER ECN 240626040408	VS	07/02/24

THE DESIGN AND DIMENSIONS OF THE PRODUCT SHOWN ON THIS DRAWING ARE SUBJECT TO CHANGE WITHOUT NOTICE. DIMENSIONS ARE IN INCHES [mm].

TITLE
SPIKESHIELD 105/132 SERIES AC SURGE PROTECTOR, HARD WIRED, NON-METALLIC

WIRING DEVICE-KELLEMS
HUBBELL INCORPORATED
SHELTON, CT

TOLERANCES UNLESS OTHERWISE SPECIFIED
.XX = ± .01
.XXX= ± .005
ANGLE TOL. ±2°

DR. BY	VS	SCALE	1 : 2
CHK. BY	D.LI	DATE	07/02/24

B

M-14806

1