M-14808 | 1

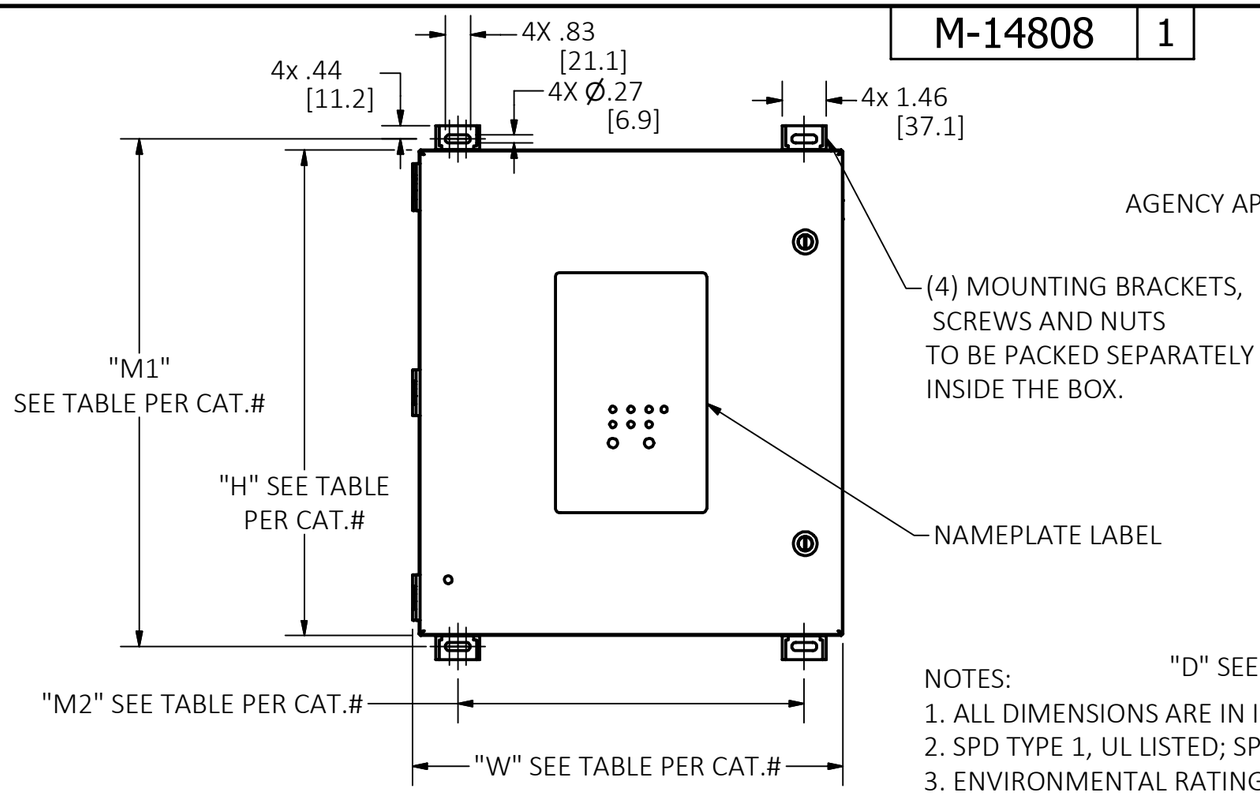

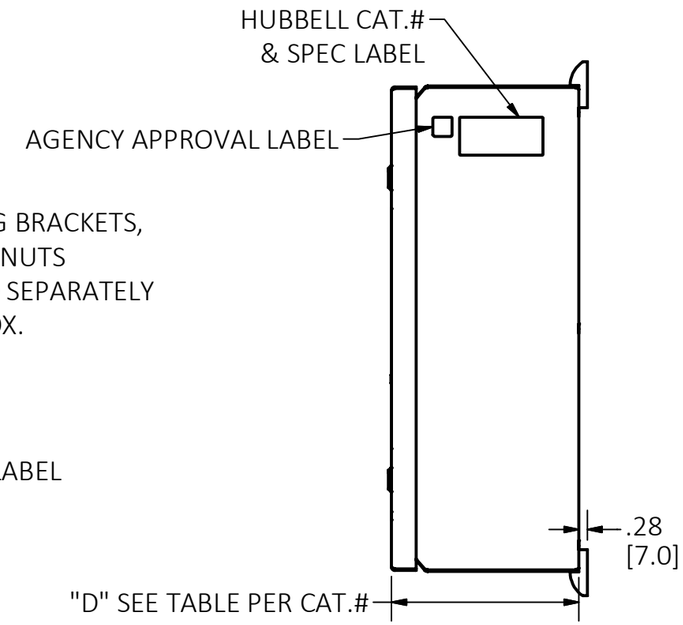

NOTES:
1. ALL DIMENSIONS ARE IN INCHES [mm].
2. SPD TYPE 1, UL LISTED; SPD TYPE 2, c-UL CERTIFICATED.
3. ENVIRONMENTAL RATING: IP66/NEMA 4.
4. OPERATING TEMPERATURE: -50/85 °C [-58/185 °F].
5. SCCR=200KA, I(nom)=20KA.

CAT. No.	DESCRIPTION	WEIGHT /lbs. [kg]	RATED VOLTAGE	HIGH "H" / in [mm]	WIDE "W"/ in [mm]	DEPTH "D" /in [mm]	M1 / inches [mm]	M2 / inches [mm]
HBL3P150S	SPD PANEL, 300KA 120/240 VAC, SPLIT PH	23 [10.4]	120/240VAC	12.00 [304.8]	12.22 [310.4]	6.19 [157.1]	12.72 [323.1]	9.44 [239.7]
HBL4P150S	SPD PANEL, 300KA 120/208 VAC, WYE 3PH	23 [10.4]	120/208VAC	12.00 [304.8]	12.22 [310.4]	6.19 [157.1]	12.72 [323.1]	9.44 [239.7]
HBL5P150S	SPD PANEL, 300KA 240 VAC, DELTA 3PH	23 [10.4]	240VAC	12.00 [304.8]	12.22 [310.4]	6.19 [157.1]	12.72 [323.1]	9.44 [239.7]
HBL6P150S	SPD PANEL, 300KA 120/120/240 VAC, DELTA SPLIT 3PH	23 [10.4]	120/120/240 VAC	12.00 [304.8]	12.22 [310.4]	6.19 [157.1]	12.72 [323.1]	9.44 [239.7]
HBL8P150S	SPD PANEL, 300KA 277/480 VAC, WYE 3PH	23 [10.4]	277/480VAC	12.00 [304.8]	12.22 [310.4]	6.19 [157.1]	12.72 [323.1]	9.44 [239.7]
HBL9P150S	SPD PANEL, 300KA 480 VAC, DELTA 3PH	23 [10.4]	480VAC	12.00 [304.8]	12.22 [310.4]	6.19 [157.1]	12.72 [323.1]	9.44 [239.7]
HBL10P150S	SPD PANEL, 300KA 347/600 VAC, WYE 3PH	23 [10.4]	347/600VAC	12.00 [304.8]	12.22 [310.4]	6.19 [157.1]	12.72 [323.1]	9.44 [239.7]
HBL3P300S	SPD PANEL, 600KA 120/240 VAC, SPLIT PH	23 [10.4]	120/240VAC	12.00 [304.8]	12.22 [310.4]	6.19 [157.1]	12.72 [323.1]	9.44 [239.7]
HBL4P300S	SPD PANEL, 600KA 120/208 VAC, WYE 3PH	28 [12.7]	120/208VAC	16.00 [406.4]	14.20 [360.6]	6.19 [157.1]	16.72 [424.7]	11.44 [290.5]
HBL5P300S	SPD PANEL, 600KA 240 VAC, DELTA 3PH	45 [20.4]	240VAC	20.00 [508.0]	16.22 [412.0]	8.18 [207.9]	20.72 [526.3]	13.44 [341.3]
HBL6P300S	SPD PANEL, 600KA 120/120/240 VAC, DELTA SPLIT 3PH	45 [20.4]	120/120/240 VAC	20.00 [508.0]	16.22 [412.0]	8.18 [207.9]	20.72 [526.3]	13.44 [341.3]
HBL8P300S	SPD PANEL, 600KA 277/480 VAC, WYE 3PH	28 [12.7]	277/480VAC	16.00 [406.4]	14.20 [360.6]	6.19 [157.1]	16.72 [424.7]	11.44 [290.5]
HBL9P300S	SPD PANEL, 600KA 480 VAC, DELTA 3PH	45 [20.4]	480VAC	20.00 [508.0]	16.22 [412.0]	8.18 [207.9]	20.72 [526.3]	13.44 [341.3]
HBL10P300S	SPD PANEL, 600KA 347/600 VAC, WYE 3PH	28 [12.7]	347/600VAC	16.00 [406.4]	14.20 [360.6]	6.19 [157.1]	16.72 [424.7]	11.44 [290.5]

CAGE CODE 74545

LIST OF PARTS

DESCRIPTION	MATERIAL	FINISH
ENCLOSURE	STEEL	PAINTED
MOUNTING FEET	THERMOPLASTIC	
SCREW	STEEL	Zn PLATE
NUT	STEEL	Zn PLATE

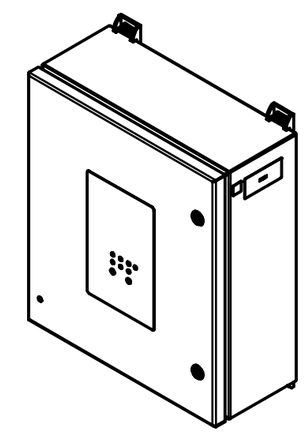

REV	DESCRIPTION	APP	DATE
1	INITIAL RELEASE PER ECN 240626040408	VS	07/03/24

THE DESIGN AND DIMENSIONS OF THE PRODUCT SHOWN ON THIS DRAWING ARE SUBJECT TO CHANGE WITHOUT NOTICE. DIMENSIONS ARE IN INCHES [mm].

TITLE
SPIKESHIELD 150/300S STD SERIES AC SURGE PROTECTION PANEL

WIRING DEVICE-KELLEMS
HUBBELL INCORPORATED
SHELTON, CT

TOLERANCES UNLESS OTHERWISE SPECIFIED
.XX = ± .01
.XXX= ± .005
ANGLE TOL. ±2°

DR. BY	VS	SCALE	1 : 5
CHK. BY	D.LI	DATE	07/03/24

DIMENSION SHEET FOR CAT. NO.
SEE TABLE

B

M-14808

1