M-12332	2

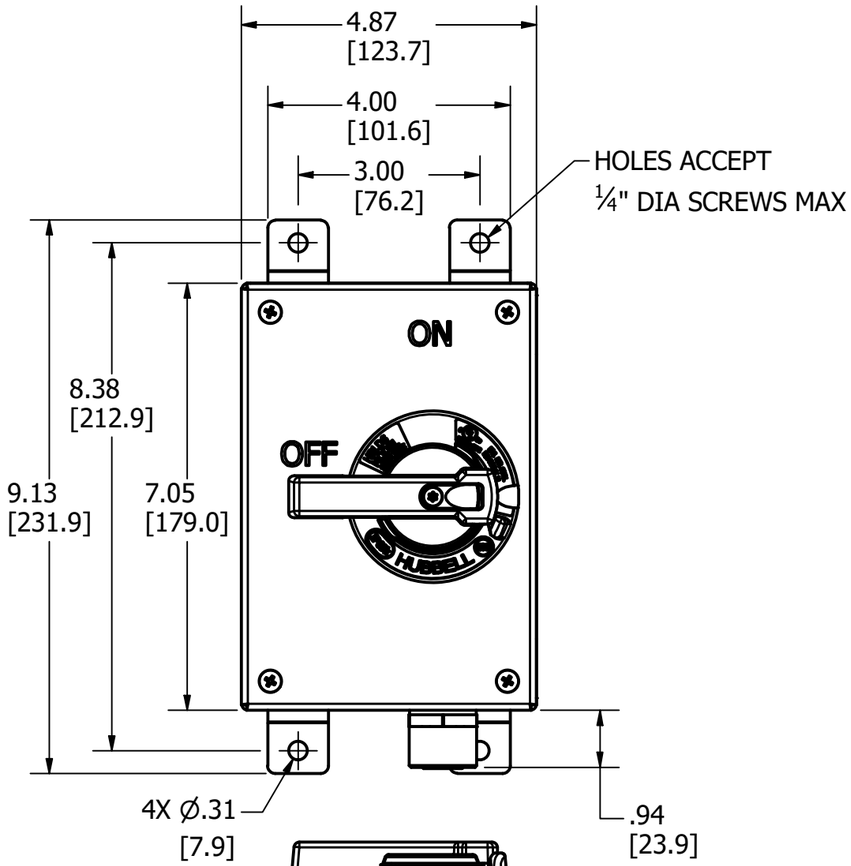

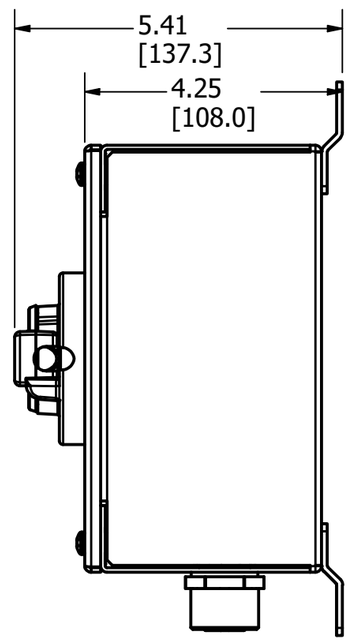

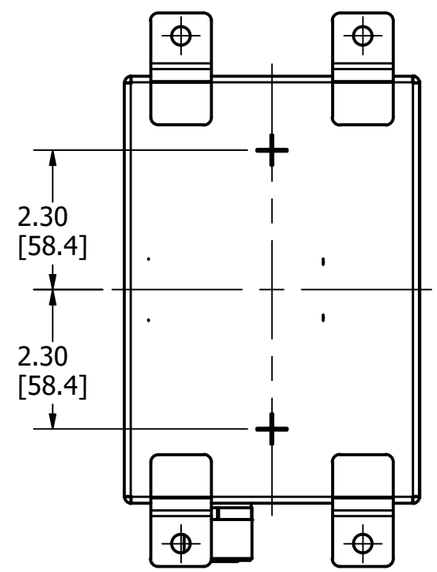

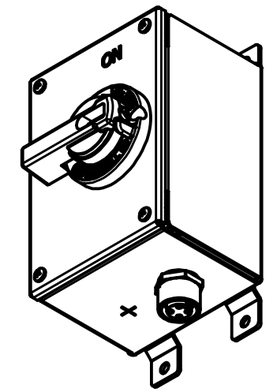

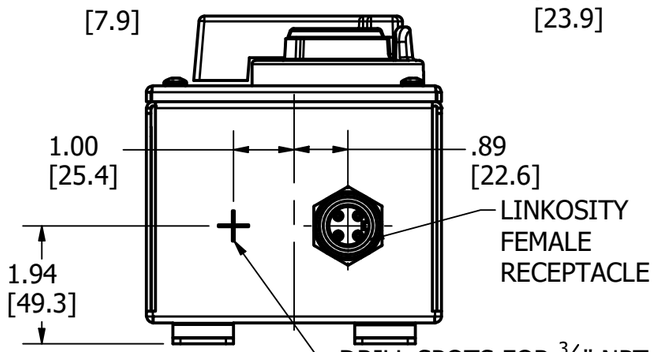

DRILL SPOTS FOR ¾" NPT CONDUIT FITTING, (5) PLACES. PROVISION FOR TOP, BOTTOM, & BACK FEED. INSTALLER TO DRILL OR PUNCH Ø1.11 INCH (Ø28.2 mm) HOLE FOR CONDUIT FITTING.

NOTES:
1. DIMENSIONS SHOWN ARE IN INCHES [mm].
2. ENCLOSURE TYPE 4X & 12.
3. CULUS LISTED.

30A 600V A.C. RATINGS	
HP	VOLTAGE
1 HP	120V AC 1 Ø
3 HP	200-240V AC 1 Ø
5 HP	480V AC 1 Ø
7.5 HP	200-240V AC 3 Ø
15 HP	480V AC 3 Ø
15 HP	600V AC 3 Ø

30A 600V A.C. RATINGS		
CATALOG #	TERM. MAX. CAP. & WIRE INFO	TERMINAL TORQUE
HBLDS3SSMQR	#10 AWG Cu WIRE ONLY	12 in-lbs [1.5 Nm]

LIST OF PARTS

DESCRIPTION	MATERIAL	FINISH
ENCLOSURE & HARDWARE	STAINLESS STEEL	
HANDLE & MOUNT	PBT	
GASKET	EPDM FOAM	

SYM	DESCRIPTION	APPROVED	DATE
2	REMOVED VIEW OF CONDUIT HUB & HUB VIEW WITH DIMENSIONS & REMOVED FROM PARTS LIST PER DCN 220907023814 RM	JCF	9/29/22
1	RELEASED PER DCN# 19082 MAM	TLS	10/18/12

THE DESIGN AND DIMENSIONS OF THE PRODUCT SHOWN ON THIS DRAWING ARE SUBJECT TO CHANGE WITHOUT NOTICE

TITLE
MOTORQUICK™ LINKOSITY™ STAINLESS STEEL ENCL. TYPE 4 CIRCUIT-LOCK™ 30 AMP DISCONNECT SWITCH, POWER OUT ONLY

TOLERANCES UNLESS OTHERWISE SPECIFIED
FRACTIONS ±1/64
DECIMALS ±.005
ANGLES ±2°

WIRING DEVICE-KELLEMS
HUBBELL INCORPORATED
SHELTON, CT

DR. BY	MAM	APP. BY	TLS
TR. BY	MAM	SCALE	NONE
CHK'D BY	MJZ	DATE	10/18/2012

DIMENSION SHEET FOR CAT. NO.
SEE NOTES
REPAIRABLE ☐
NON-REPAIRABLE ☒

B
M-12332
2

CODE 74545