M-12746 | 3

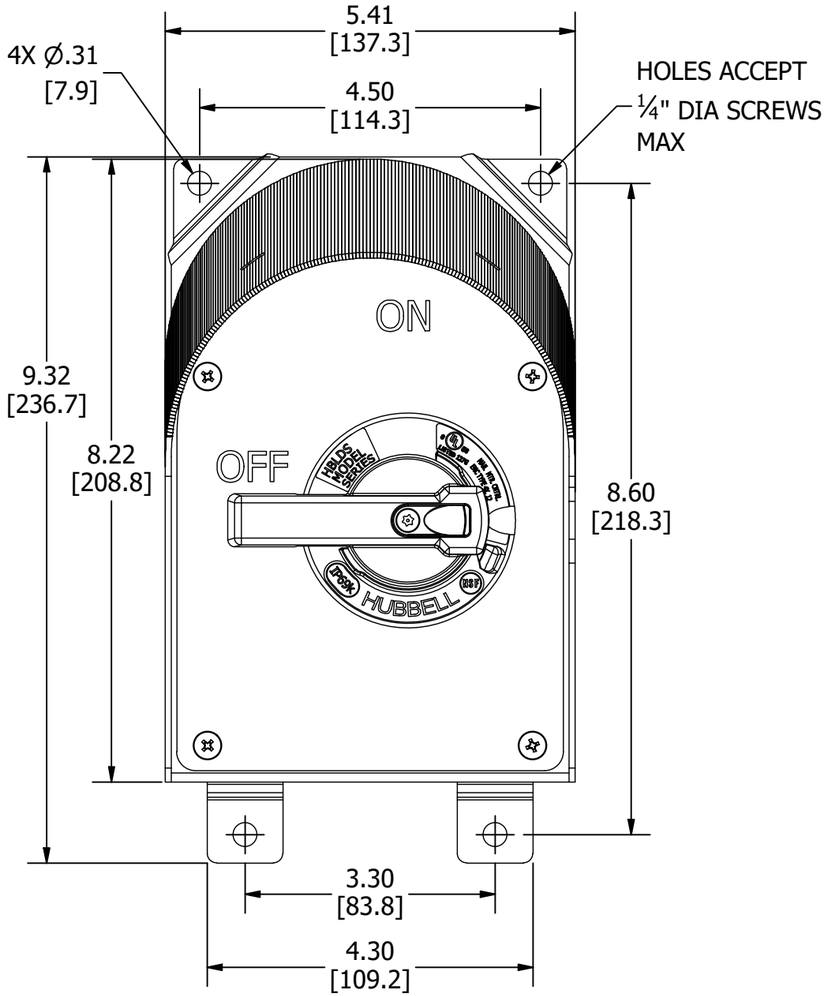

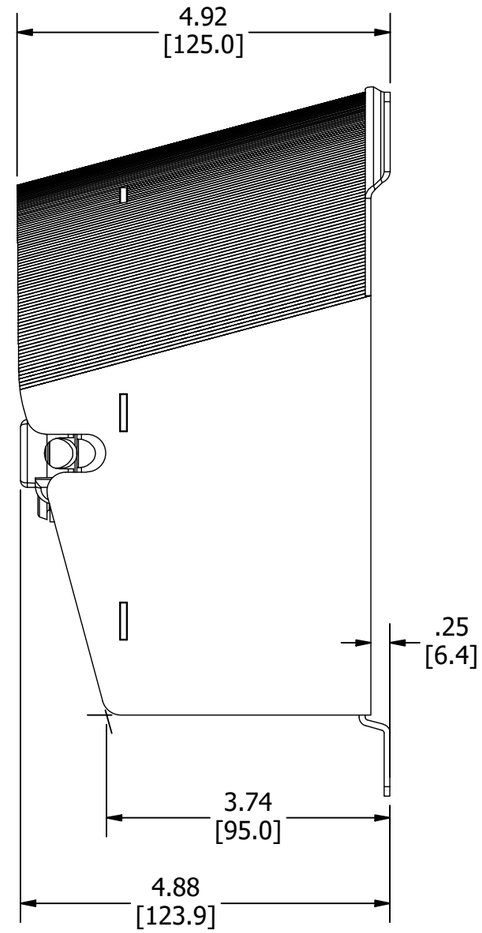

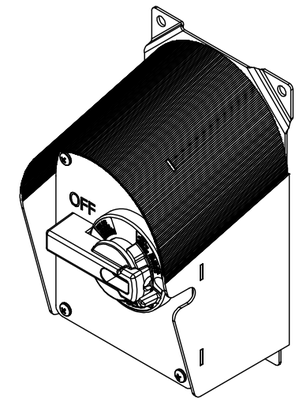

NOTES UNLESS OTHERWISE SPECIFIED:
1. CATALOG NUMBER (SEE TABLE)
2. DIMENSIONS SHOWN ARE IN INCHES [mm].
3. ENCLOSURE TYPE 4X, IP69k & 12.
4. cULus LISTED.

30A 600V A.C. RATINGS	
HP	VOLTAGE
1 HP	120V AC 1Ø
3 HP	200-240V AC 1Ø
5 HP	480V AC 1Ø
7.5 HP	200-240V AC 3Ø
15 HP	480V AC 3Ø
15 HP	600V AC 3Ø

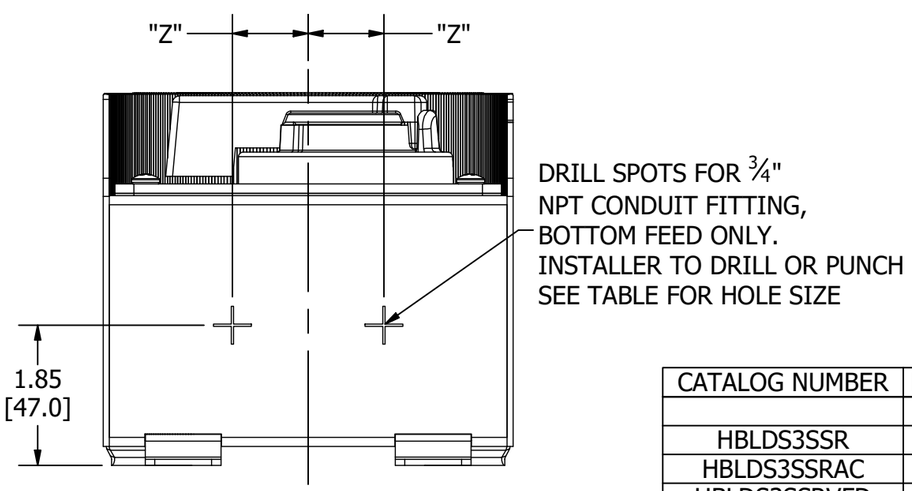

HBLD3SSR SHOWN

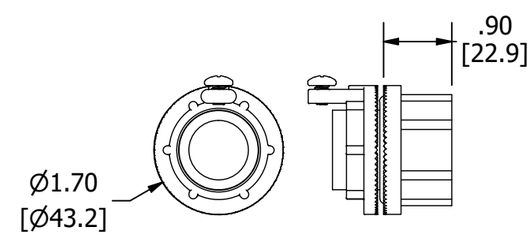

¾ INCH STAINLESS STEEL
NPT CONDUIT FITTING

CATALOG NUMBER	DIMENSION	CONDUIT HUB			
	"Z"	MATERIAL	HOLE SIZE (DIA)	QUANTITY	INSTALLED
HBLDS3SSR	1.00 [25.4]	------	1.11 [28.2]	---	------
HBLDS3SSRAC	1.00 [25.4]	------	1.11 [28.2]	---	------
HBLDS3SSRVFD	1.00 [25.4]	------	1.11 [28.2]	---	------
HBLDS3SSR2K	1.125 [28.6]	STAINLESS STEEL	N/A	2	YES

LIST OF PARTS

DESCRIPTION	MATERIAL	FINISH
ENCLOSURE & HARDWARE	STAINLESS STEEL	
HANDLE & MOUNT	PBT	
GASKET	EPDM FOAM	
CONDUIT HUB	STAINLESS STEEL	

SYM	DESCRIPTION	APPROVED	DATE
3	REMOVED CONDUIT HUB VIEW & HUB VIEW WITH DIMENSIONS; REMOVED ZINC MATERIAL FOR HUB IN PARTS LIST; IN TABLE FOR HBLDS3SSR, SSRAC, SSRVFD MATERIAL QUANTITY & INSTALLED COLUMNS: DELETED NOMENCLATURE AND ADDED DASHES TO INDICATE BLANK RM	JCF	9/29/2022
2	ADDED CND HUB TABLE, CAT. NO. HBLDS3SSR2K. PARTS LIST CND HUB WAS ZINC, 3/4 INCH ZINC NPT CND FTG WAS 3/4 INCH NPT CND FTG PER DCN 21952 JZW	PJB	3/2/2016
1	RELEASED PER DCN# 20826 RGP TLS	TLS	10/07/14

THE DESIGN AND DIMENSIONS OF THE PRODUCT SHOWN ON THIS DRAWING ARE SUBJECT TO CHANGE WITHOUT NOTICE

TITLE
CIRCUIT-LOCK™ 30 AMP SLOPED TOP STAINLESS STEEL DISCONNECT SWITCH

TOLERANCES UNLESS OTHERWISE SPECIFIED
FRACTIONS ± 1/64
DECIMALS ± .030
ANGLES ± 2°

WIRING DEVICE-KELLEMS
HUBBELL INCORPORATED
SHELTON, CT

DR. BY	RGP	APP. BY	TLS
TR. BY		SCALE	NONE
CHK'D BY	TLS	DATE	10/21/2014

DIMENSION SHEET FOR CAT. NO. SEE NOTES

REPAIRABLE ☐ NON-REPAIRABLE ☒

B M-12746 3

CODE 74545