M-12748 | 2

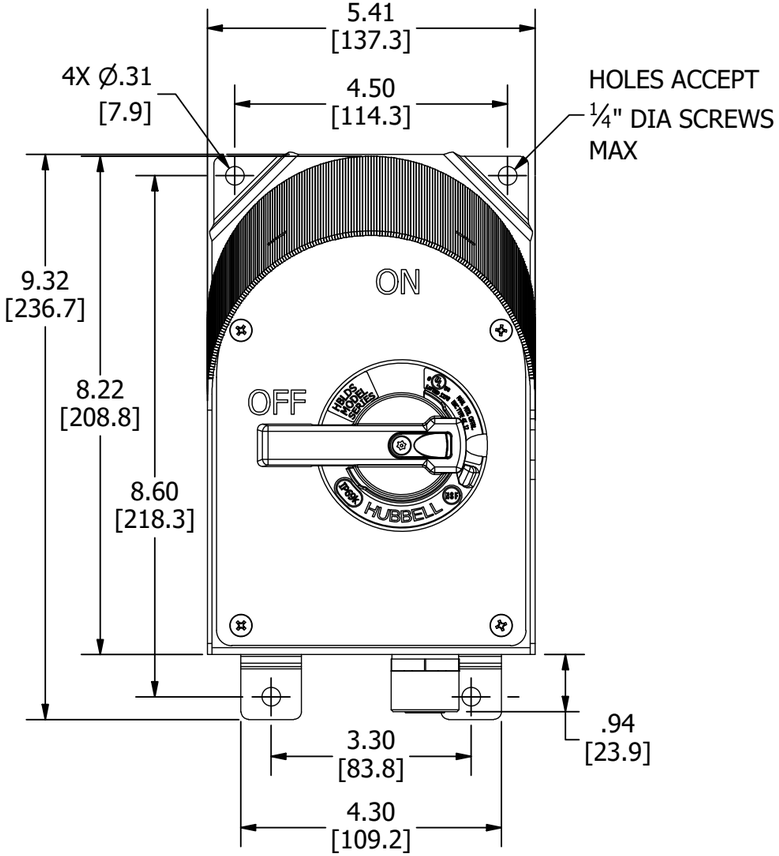

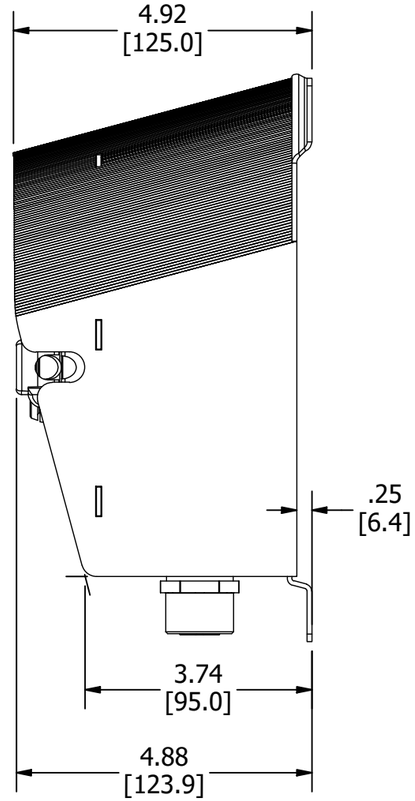

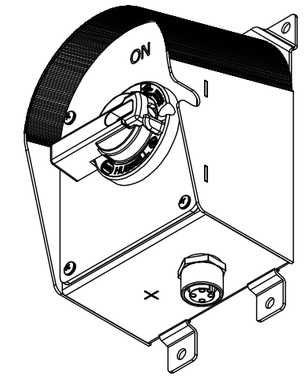

30A 600V A.C. RATINGS	
HP	VOLTAGE
1 HP	120V AC 1Ø
3 HP	200-240V AC 1Ø
5 HP	480V AC 1Ø
7.5 HP	200-240V AC 3Ø
15 HP	480V AC 3Ø
15 HP	600V AC 3Ø

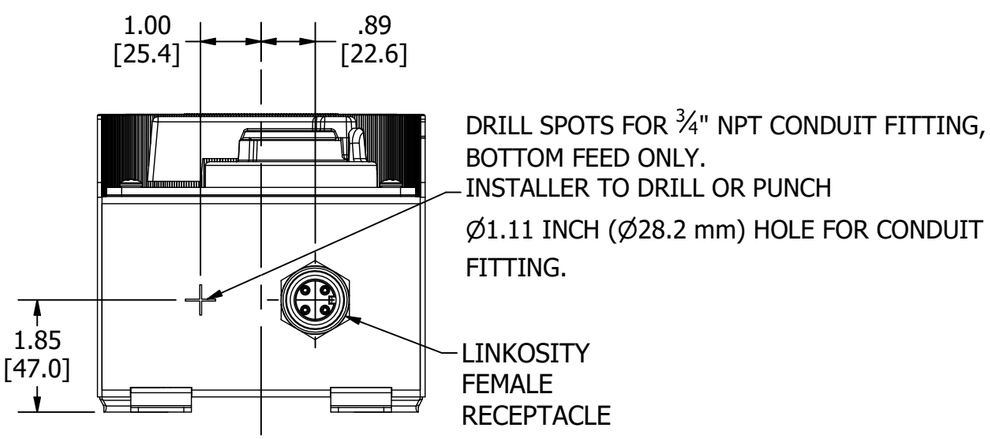

30A 600V A.C. RATINGS		
CATALOG #	TERM. MAX. CAP. & WIRE INFO	TERMINAL TORQUE
HBLDS3SSRMQR	#10 AWG Cu WIRE ONLY	12 in-lbs [1.5 Nm]

CODE 74545

NOTES UNLESS OTHERWISE SPECIFIED:
1. DIMENSIONS SHOWN ARE IN INCHES [mm].
2. ENCLOSURE TYPE 4X, IP69k & 12.
3. cULus LISTED.

LIST OF PARTS

DESCRIPTION	MATERIAL	FINISH
ENCLOSURE & HARDWARE	STAINLESS STEEL	
HANDLE & MOUNT	PBT	
GASKET	EPDM FOAM	

SYM	DESCRIPTION	APPROVED	DATE
2	REMOVED VIEW OF CONDUIT HUB & VIEW OF HUB WITH DIMENSIONS; REMOVED HUB FROM PARTS LIST PER DCN 220907023814 RM	JCF	10/3/22
1	RELEASED PER DCN# 20826 RGP TLS	TLS	10/07/14

THE DESIGN AND DIMENSIONS OF THE PRODUCT SHOWN ON THIS DRAWING ARE SUBJECT TO CHANGE WITHOUT NOTICE

TITLE
MOTORQUICK™ LINKOSITY™ STAINLESS STEEL ENCL. TYPE 4 CIRCUIT-LOCK™ 30 AMP SLOPED TOP DISCONNECT SWITCH, POWER OUT ONLY

TOLERANCES UNLESS OTHERWISE SPECIFIED
FRACTIONS ± 1/64
DECIMALS ± .030
ANGLES ± 2°

WIRING DEVICE-KELLEMS
HUBBELL INCORPORATED
SHELTON, CT

DR. BY	RGP	APP. BY	TLS
TR. BY		SCALE	NONE
CHK'D BY	TLS	DATE	10/21/2014

DIMENSION SHEET FOR CAT. NO. SEE NOTES

REPAIRABLE ☐ NON-REPAIRABLE ☒

B M-12748 2