M-13061 | 2

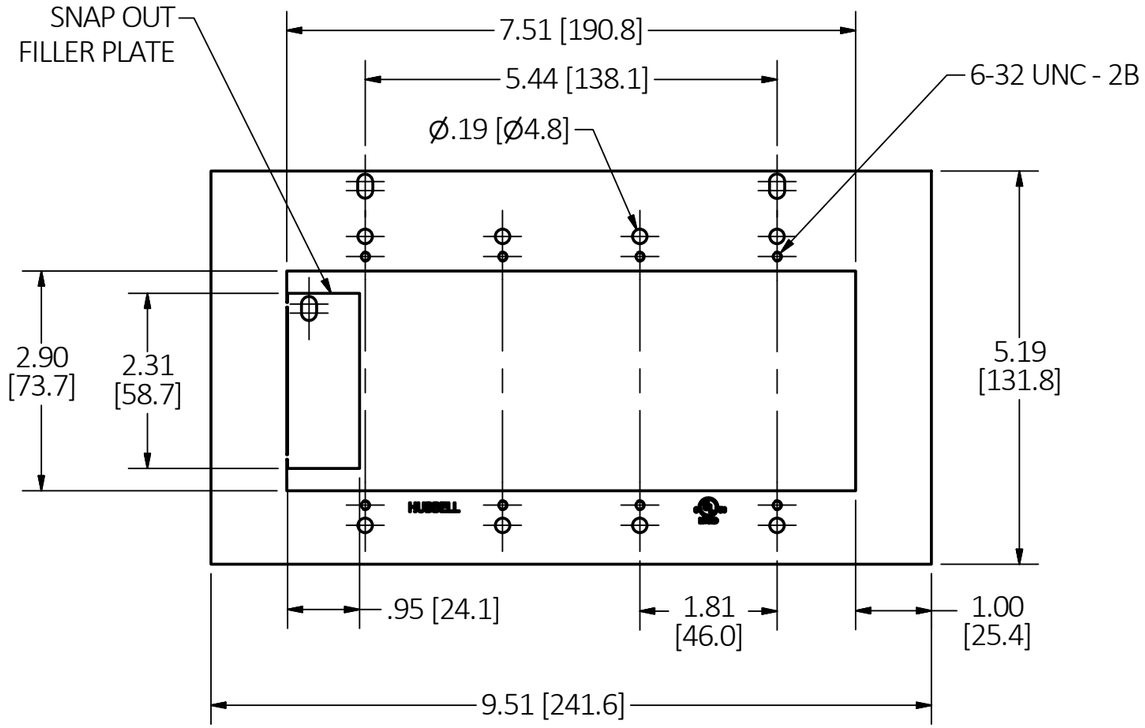

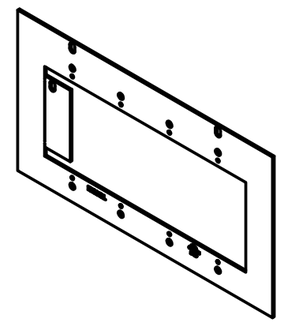

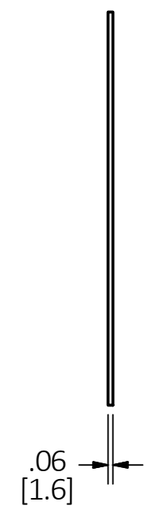

NOTES:
1. ALL DIMENSIONS ARE IN INCHES AND [MILLIMETERS].
2. PRODUCT IS cULus LISTED.
3. MOUNTING HARDWARE INCLUDED.

CAGE CODE 74545

LIST OF PARTS

DESCRIPTION	MATERIAL	FINISH
FACE PLATE	CRS	PRE-GALVANIZED

REV	DESCRIPTION	APP	DATE
2	REDRAWN & REVISED PER DCN 23447	SBW	2/5/18

THE DESIGN AND DIMENSIONS OF THE PRODUCT SHOWN ON THIS DRAWING ARE SUBJECT TO CHANGE WITHOUT NOTICE. DIMENSIONS ARE IN INCHES [mm].

TITLE MOUNTING PLATE, NEMA INTERMEDIARY, RECESSED 10 GANG FLOOR BOX

WIRING DEVICE-KELLEMS
HUBBELL INCORPORATED
SHELTON, CT

TOLERANCES UNLESS OTHERWISE SPECIFIED
.XX = ± .01
.XXX= ± .005
ANGLE TOL. ±2°

DR. BY SBW
CHK. BY
SCALE 1 / 2
DATE 2/2/18

DIMENSION SHEET FOR CAT. NO.
FB10MPNEMA4G

B
M-13061
2