M-13542	2

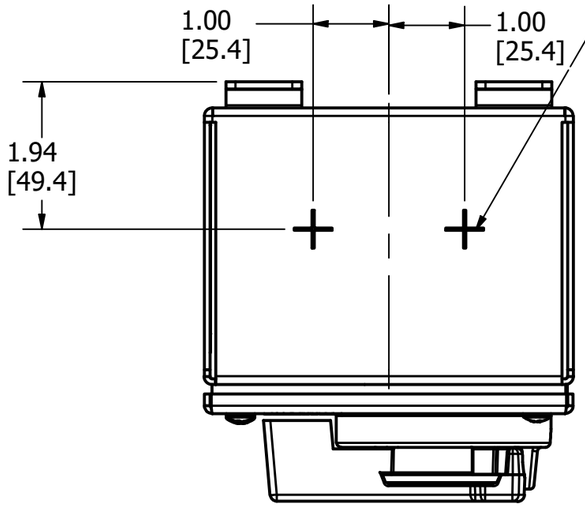

DRILL SPOTS FOR ¾" NPT CONDUIT FITTING, (6) PLACES. PROVISION FOR TOP, BOTTOM, & BACK FEED. INSTALLER TO DRILL OR PUNCH Ø1.11 INCH (Ø28.2 mm) HOLE FOR CONDUIT FITTING.

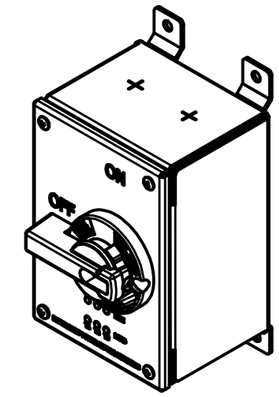

NOTES:
1. CATALOG NUMBER: HBLDS3SSP.
2. DIMENSIONS SHOWN ARE IN INCHES [mm].
3. ENCLOSURE TYPE 4X & 12.
4. CULUS LISTED.
5. NSF CERTIFIED AND IP69K RATING.

30A 600V A.C. RATINGS	
HP	VOLTAGE
1 HP	120V AC 1Ø
3 HP	200-240V AC 1Ø
5 HP	480V AC 1Ø
7.5 HP	200-240V AC 3Ø
15 HP	480V AC 3Ø
15 HP	600V AC 3Ø

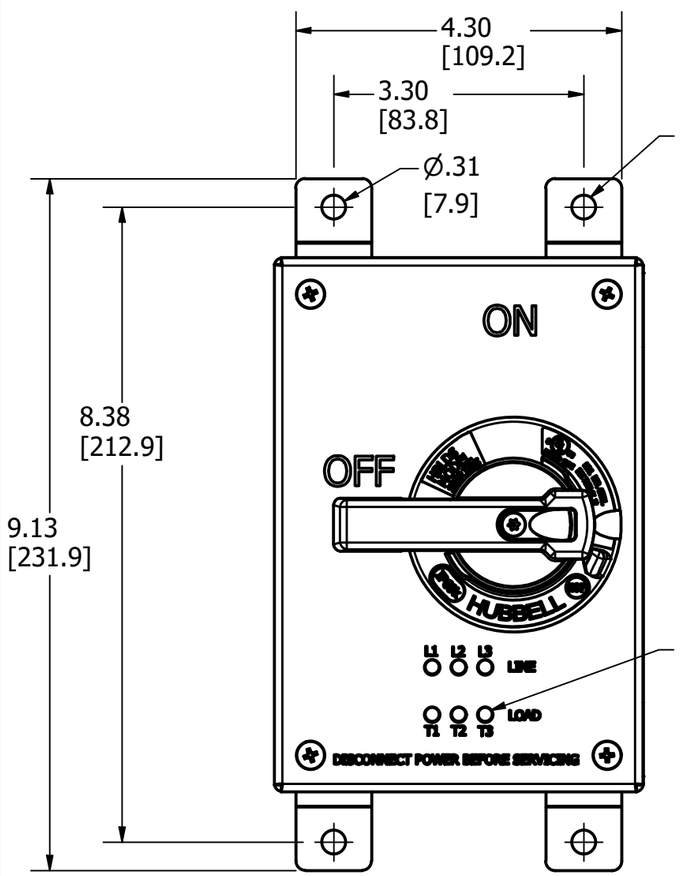

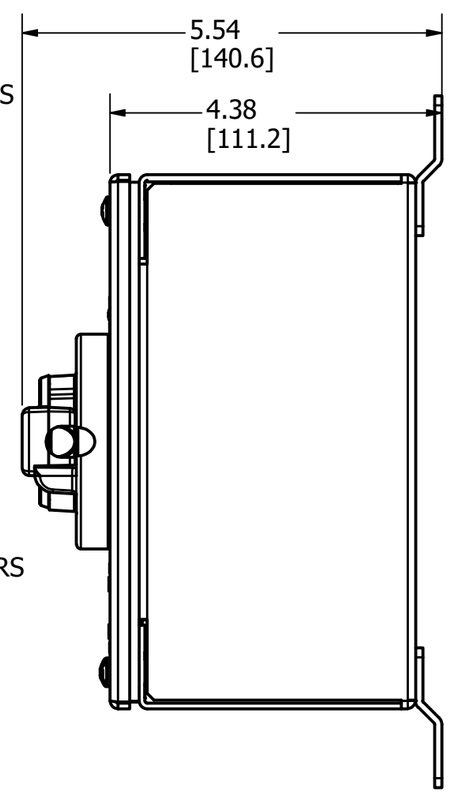

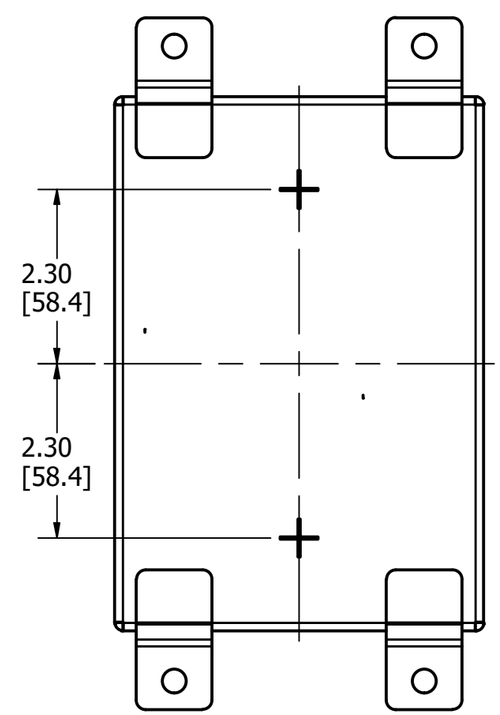

LIST OF PARTS

DESCRIPTION	MATERIAL	FINISH
ENCLOSURE & HARDWARE	STAINLESS STEEL	
HANDLE & MOUNT	PBT	
GASKET	EPDM FOAM	

SYM	DESCRIPTION	APPROVED	DATE
2	REMOVED VIEW OF CONDUIT HUB & VIEW OF HUB WITH DIMENSIONS; REMOVED HUB FROM PARTS LIST DCN 220907023814 RM	JCF	10/3/22
1	RELEASED PER DCN# 22777 CAC	TLS	01/06/17

THE DESIGN AND DIMENSIONS OF THE PRODUCT SHOWN ON THIS DRAWING ARE SUBJECT TO CHANGE WITHOUT NOTICE

TITLE CIRCUIT-LOCK™ 30 AMP STAINLESS STEEL DISCONNECT SWITCH LED INDICATORS

TOLERANCES UNLESS OTHERWISE SPECIFIED
FRACTIONS ±1/64
DECIMALS ±.005
ANGLES ±2°

WIRING DEVICE-KELLEMS
HUBBELL INCORPORATED
SHELTON, CT

DR. BY	CAC	APP. BY	TLS
TR. BY		SCALE	NONE
CHK'D BY		DATE	1/6/2017

DIMENSION SHEET FOR CAT. NO.
HBLDS3SSP
REPAIRABLE ☐
NON-REPAIRABLE ☒
B
M-13542
2

CODE 74545