M-14031 | 3

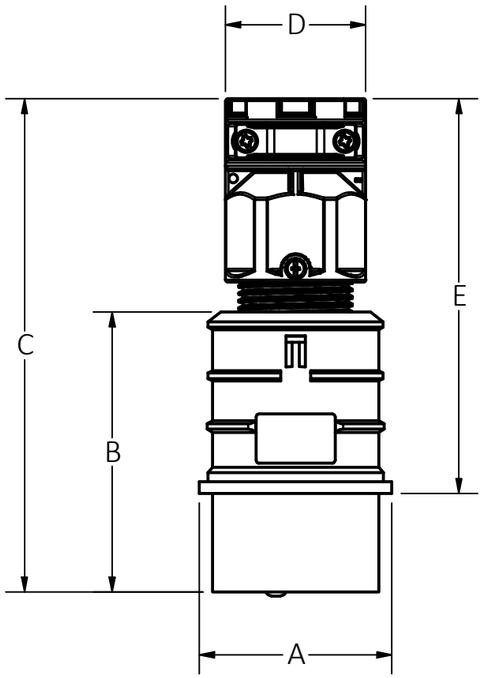


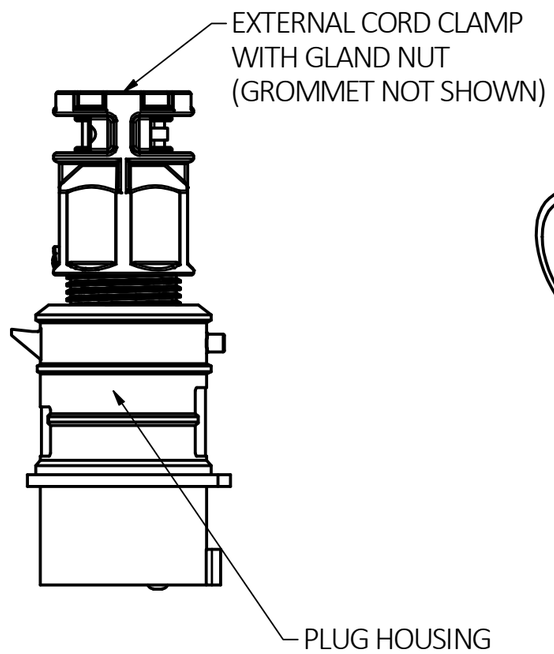


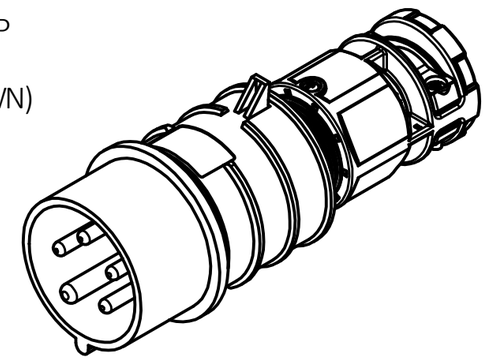

16A/20A 5W SPLASHPROOF
PLUG SHOWN

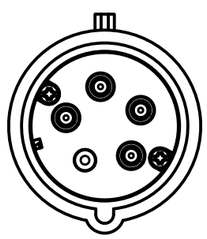

NOTES:
1. UL LISTED STANDARD 1682, CSA CERTIFIED C22.2 NO. 182.1 - 1988 AND COMPLY TO VDE AND CE REQUIREMENTS. COMPLIES WITH IEC 60309-1 AND IEC 60309-2 STANDARDS.
ENVIRONMENTAL RATING: SEE TABLES ON SHEET 2 & 3
2. DIMENSIONS ARE DISPLAYED ON SHEET 2 FOR cULus LISTED AND VDE RATED CAT NO.'S AND ON SHEET 3 FOR DUAL RATED CAT NO.'S.
3. SEE TABLE FOR CABLE RANGES.

| CABLE RANGES | | | |
|---|---|---|---|
| UL | | VDE | |
| AMPERE | MIN/MAX OD | AMPERE | MIN/MAX OD |
| 20 | .370/.710 | 16 | .360/.827 |
| 30 | .565/1.150 | 32 | .565/1.161 |
| 60 | .970/1.450 | 63 | .970/1.450 |
| 100 | 1.050/1.880 | 125 | 1.220/1.890 |

LIST OF PARTS

| DESCRIPTION | MATERIAL | FINISH |
|---|---|---|
| PLUG HOUSING | PBT | |
| EXTERNAL CORD CLAMP | PBT/PC | |
| PIN HOLDER | NYLON GF | |
| CONTACT PINS | BRASS | |
| LOCKING RING | PBT/PC | |
| CONTACT CARRIER | NYLON GF | |
| GROMMET | TPE | |
| ASSEMBLY SCREWS | ST. STEEL | |
| | | |
| | | |
| | | |
| | | |
| | | |
| | | |
| | | |

| REV | DESCRIPTION | APP | DATE |
|---|---|---|---|
| 3 | MOVED CABLE RANGE INFO FROM NOTE 3 TO SEPARATE TABLE; ADDED RANGES FOR UL AND VDE PER EC 200521113048 MJV CAC | | 05/01/20 |
| 2 | ADDED NEW ROW FOR CAT. C320P4SA ON SHEET 2 PER EC 200110070227 MJV | | 12/05/19 |
| 1 | NEW RELEASE PER DCN 24432 AD CAC | | 01/14/19 |

THE DESIGN AND DIMENSIONS OF THE PRODUCT SHOWN ON THIS DRAWING ARE SUBJECT TO CHANGE WITHOUT NOTICE. DIMENSIONS ARE IN INCHES [mm].

TITLE
SPLASHPROOF PLUG 16A, 20A, 30A, 32A, 60A, 63A, 100A, 125A

WIRING DEVICE-KELLEMS
HUBBELL INCORPORATED
SHELTON, CT

TOLERANCES UNLESS OTHERWISE SPECIFIED
.XX = ± .01
.XXX= ± .005
ANGLE TOL. ±2°

| DR. BY | AD | SCALE | 1 / 2 |
|---|---|---|---|
| CHK. BY | CAC | DATE | 12/4/18 |

DIMENSION SHEET FOR CAT. NO.
SEE TABLES ON SHEET 2 AND 3

B
M-14031
3

CAGE CODE 74545

UL LISTED AND VDE RATED CAT NO.S

| CAT NO. | AMP | VOLTAGE | POLES & WIRES | IP RATING | UL LISTED | VDE LISTED | A | | B | | C | | D | | E | |
|---|---|---|---|---|---|---|---|---|---|---|---|---|---|---|---|---|
| | | | | | | | in. | mm | in. | mm | in. | mm | in. | mm | in. | mm |
| C320P4SA | 20A | 125VAC | 2P 3W | IP44 | YES | NO | 2.01 | 51 | 3.62 | 92 | 6.18 | 157 | 1.73 | 44 | 4.88 | 124 |
| C320P7SA | 20A | 480VAC | 2P 3W | IP44 | YES | NO | 2.01 | 51 | 3.62 | 92 | 6.18 | 157 | 1.73 | 44 | 4.88 | 124 |
| C420P5SA | 20A | 3Ø 600VAC | 3P 4W | IP44 | YES | NO | 2.28 | 58 | 3.58 | 58 | 6.18 | 157 | 1.73 | 44 | 4.88 | 124 |
| C420P7SA | 20A | 3Ø 480VAC | 3P 4W | IP44 | YES | NO | 2.28 | 58 | 3.58 | 91 | 6.18 | 157 | 1.73 | 44 | 4.88 | 124 |
| C420P12SA | 20A | 125/250VAC | 3P 4W | IP44 | YES | NO | 2.28 | 58 | 3.58 | 91 | 6.18 | 157 | 1.73 | 44 | 4.88 | 124 |
| C520P5SA | 20A | 3ØY 347/600V | 4P 5W | IP44 | YES | NO | 2.54 | 65 | 3.70 | 94 | 6.54 | 166 | 1.85 | 47 | 5.24 | 133 |
| C520P7SA | 20A | 3ØY 277/480V | 4P 5W | IP44 | YES | NO | 2.54 | 65 | 3.70 | 94 | 6.54 | 166 | 1.85 | 47 | 5.24 | 133 |
| C330P4SA | 30A | 125VAC | 2P 3W | IP44 | YES | NO | 2.60 | 66 | 4.61 | 117 | 8.03 | 204 | 2.32 | 59 | 6.22 | 158 |
| C330P7SA | 30A | 480VAC | 2P 3W | IP44 | YES | NO | 2.60 | 66 | 4.61 | 117 | 8.03 | 204 | 2.32 | 59 | 6.22 | 158 |
| C430P5SA | 30A | 3Ø 600VAC | 3P 4W | IP44 | YES | NO | 2.60 | 66 | 4.61 | 117 | 8.03 | 204 | 2.32 | 59 | 6.22 | 158 |
| C430P7SA | 30A | 3Ø 480VAC | 3P 4W | IP44 | YES | NO | 2.60 | 66 | 4.61 | 117 | 8.03 | 204 | 2.32 | 59 | 6.22 | 158 |
| C430P12SA | 30A | 125/250VAC | 3P 4W | IP44 | YES | NO | 2.60 | 66 | 4.61 | 117 | 8.03 | 204 | 2.32 | 59 | 6.22 | 158 |
| C530P5SA | 30A | 3ØY 347/600V | 4P 5W | IP44 | YES | NO | 2.83 | 72 | 4.61 | 117 | 8.03 | 204 | 2.32 | 59 | 6.22 | 158 |
| C530P7SA | 30A | 3ØY 277/480V | 4P 5W | IP44 | YES | NO | 2.83 | 72 | 4.61 | 117 | 8.03 | 204 | 2.32 | 59 | 6.22 | 158 |
| C360P4SA | 60A | 125VAC | 2P 3W | IP44 | YES | NO | 3.80 | 97 | 6.00 | 153 | 10.04 | 255 | 2.83 | 72 | 7.44 | 189 |
| C360P7SA | 60A | 480VAC | 2P 3W | IP44 | YES | NO | 3.80 | 97 | 6.00 | 153 | 10.04 | 255 | 2.83 | 72 | 7.44 | 189 |
| C460P5SA | 60A | 3Ø 600VAC | 3P 4W | IP44 | YES | NO | 3.80 | 97 | 6.00 | 153 | 10.04 | 255 | 2.83 | 72 | 7.40 | 188 |
| C460P7SA | 60A | 3Ø 480VAC | 3P 4W | IP44 | YES | NO | 3.80 | 97 | 6.00 | 153 | 10.04 | 255 | 2.83 | 72 | 7.40 | 188 |
| C460P12SA | 60A | 125/250VAC | 3P 4W | IP44 | YES | NO | 3.80 | 97 | 6.00 | 153 | 10.04 | 255 | 2.83 | 72 | 7.40 | 188 |
| C560P5SA | 60A | 3ØY 347/600V | 4P 5W | IP44 | YES | NO | 3.80 | 97 | 6.00 | 153 | 10.04 | 255 | 2.83 | 72 | 7.40 | 188 |
| C560P7SA | 60A | 3ØY 277/480V | 4P 5W | IP44 | YES | NO | 3.80 | 97 | 6.00 | 153 | 10.04 | 255 | 2.83 | 72 | 7.40 | 188 |
| C316P4SA | 16A | 100-130V | 2P 3W | IP44 | NO | YES | 2.01 | 51 | 3.62 | 92 | 6.18 | 157 | 1.73 | 44 | 4.88 | 124 |
| C332P4SA | 32A | 100-130V | 2P 3W | IP44 | NO | YES | 2.60 | 66 | 4.61 | 117 | 8.03 | 204 | 2.32 | 59 | 6.22 | 158 |
| C432P3SA | 32A | 380V 50Hz 440V 60Hz | 3P 4W | IP44 | NO | YES | 2.60 | 66 | 4.61 | 117 | 8.03 | 204 | 2.32 | 59 | 6.22 | 158 |
| C316P6SA | 16A | 220-240V~ | 2P 3W | IP44 | NO | YES | 2.01 | 51 | 3.62 | 92 | 6.18 | 157 | 1.73 | 44 | 4.88 | 124 |
| C416P6SA | 16A | 380-415V~ | 3P 4W | IP44 | NO | YES | 2.28 | 58 | 3.58 | 91 | 6.18 | 157 | 1.73 | 44 | 4.88 | 124 |
| C516P6SA | 16A | 200-415V~ | 4P 5W | IP44 | NO | YES | 2.54 | 65 | 3.70 | 94 | 6.54 | 166 | 1.85 | 47 | 5.24 | 133 |
| C332P6SA | 32A | 220-240V~ | 2P 3W | IP44 | NO | YES | 2.60 | 66 | 4.61 | 117 | 8.03 | 204 | 2.32 | 59 | 6.22 | 158 |
| C432P6SA | 32A | 380-415V~ | 3P 4W | IP44 | NO | YES | 2.60 | 66 | 4.61 | 117 | 8.03 | 204 | 2.32 | 59 | 6.22 | 158 |
| C532P6SA | 32A | 200-415V~ | 4P 5W | IP44 | NO | YES | 2.83 | 72 | 4.61 | 117 | 8.03 | 204 | 2.32 | 59 | 6.22 | 158 |
| C363P6SA | 63A | 220-240V~ | 2P 3W | IP44 | NO | YES | 3.80 | 97 | 6.00 | 153 | 10.04 | 255 | 2.82 | 72 | 7.44 | 189 |
| C463P6SA | 63A | 380-415V~ | 3P 4W | IP44 | NO | YES | 3.80 | 97 | 6.00 | 153 | 10.04 | 255 | 2.82 | 72 | 7.40 | 188 |
| C563P6SA | 63A | 200-415V~ | 4P 5W | IP44 | NO | YES | 3.8 | 97 | 6.00 | 153 | 10.04 | 255 | 2.83 | 72 | 7.60 | 193 |
| C532P6SLT | 32A | 200-415V~ | | | NO | YES | 2.83 | 72 | 4.61 | 117 | 8.03 | 204 | 2.32 | 59 | 6.22 | 158 |
| C363P6SLT | 63A | 220-240V~ | | | NO | YES | 3.80 | 97 | 6.00 | 153 | 10.04 | 255 | 2.83 | 72 | 7.44 | 189 |
| C463P6SLT | 63A | 380-415V~ | | | NO | YES | 3.80 | 97 | 6.00 | 153 | 10.04 | 255 | 2.83 | 72 | 7.44 | 189 |
| C563P6SLT | 63A | 200-415V~ | | | NO | YES | 3.80 | 97 | 6.00 | 153 | 10.04 | 255 | 2.83 | 72 | 7.44 | 189 |

CAGE CODE 74545

LIST OF PARTS

| DESCRIPTION | MATERIAL | FINISH |
|---|---|---|
| PLUG HOUSING | PBT | |
| EXTERNAL CORD CLAMP | PBT | |
| PIN HOLDER | NYLON GF | |
| CONTACT PINS | BRASS | |
| LOCKING RING | PBT/PC | |
| CONTACT CARRIER | NYLON GF | |
| GROMMET | TPE | |
| ASSEMBLY SCREWS | ST. STEEL | |

| REV | DESCRIPTION | APP | DATE |
|---|---|---|---|
| 3 | MOVED CABLE RANGE INFO FROM NOTE 3 TO SEPARATE TABLE; ADDED RANGES FOR UL AND VDE PER EC 200521113048 MJV CAC | | 05/01/20 |
| 2 | ADDED NEW ROW FOR CAT. C320P4SA ON SHEET 2 PER EC 200110070227 MJV | | 12/05/19 |
| 1 | NEW RELEASE PER DCN 24432 AD CAC | | 01/14/19 |

THE DESIGN AND DIMENSIONS OF THE PRODUCT SHOWN ON THIS DRAWING ARE SUBJECT TO CHANGE WITHOUT NOTICE. DIMENSIONS ARE IN INCHES [mm].

TITLE

SPLASHPROOF PLUG 16A, 20A, 30A, 32A, 60A, 63A, 100A, 125A

WIRING DEVICE-KELLEMS
HUBBELL INCORPORATED
SHELTON, CT

TOLERANCES UNLESS OTHERWISE SPECIFIED
.XX = ± .01
.XXX= ± .005
ANGLE TOL. ±2°

| DR. BY | AD | SCALE | |
|---|---|---|---|
| CHK. BY | CAC | DATE | 12/4/18 |

DIMENSION SHEET FOR CAT. NO.
SEE TABLE ON SHEETS 2 & 3

B

M-14031

3

DUAL RATED CAT NO.S

| CAT NO. | AMP | VOLTAGE | POLES & WIRES | IP RATING | REF. CAT NO. | DUAL AMP. | DUAL VOLTAGE | A | | B | | C | | D | | E | |
|---|---|---|---|---|---|---|---|---|---|---|---|---|---|---|---|---|---|
| | | | | | | | | in. | mm | in. | mm | in. | mm | in. | mm | in. | mm |
| C320P6SA | 20A | 250VAC | 2P 3W | IP44 | C316P6SA | 16A | 220-240V~ | 2.01 | 51 | 3.62 | 92 | 6.18 | 157 | 1.73 | 44 | 4.88 | 124 |
| C420P6SA | 20A | 380-415VAC | 3P 4W | IP44 | C416P6SA | 16A | 380-415V~ | 2.28 | 58 | 3.58 | 91 | 6.18 | 157 | 1.73 | 44 | 4.88 | 124 |
| C420P9SA | 20A | 125/250VAC | 3P 4W | IP44 | C416P9SA | 16A | 125/250V~ | 2.28 | 58 | 3.58 | 91 | 6.18 | 157 | 1.73 | 44 | 4.88 | 124 |
| C520P6SA | 20A | 200-415VAC | 4P 5W | IP44 | C516P6SA | 16A | 200-415V~ | 2.54 | 65 | 3.70 | 94 | 6.54 | 166 | 1.85 | 47 | 5.24 | 133 |
| C520P9SA | 20A | 3ØY 120/208VAC | 4P 5W | IP44 | C516P9SA | 16A | 3ØY 120/208V~ | 2.54 | 65 | 3.70 | 94 | 6.54 | 166 | 1.85 | 47 | 5.24 | 133 |
| C330P6SA | 30A | 250VAC | 2P 3W | IP44 | C332P6SA | 32A | 220-240V~ | 2.60 | 66 | 4.61 | 117 | 8.03 | 204 | 2.32 | 59 | 6.22 | 158 |
| C430P6SA | 30A | 380-415VAC | 3P 4W | IP44 | C432P6SA | 32A | 380-415V~ | 2.60 | 66 | 4.61 | 117 | 8.03 | 204 | 2.32 | 59 | 6.22 | 158 |
| C430P9SA | 30A | 125/250VAC | 3P 4W | IP44 | C432P9SA | 32A | 125/250V~ | 2.60 | 66 | 4.61 | 117 | 8.03 | 204 | 2.32 | 59 | 6.22 | 158 |
| C530P6SA | 30A | 200-415VAC | 4P 5W | IP44 | C532P6SA | 32A | 200-415V~ | 2.83 | 72 | 4.61 | 117 | 8.03 | 204 | 2.32 | 59 | 6.22 | 158 |
| C530P9SA | 30A | 3ØY 120/208VAC | 4P 5W | IP44 | C532P9SA | 32A | 3ØY 120/208V~ | 2.83 | 72 | 4.61 | 117 | 8.03 | 204 | 2.32 | 59 | 6.22 | 158 |
| C360P6SA | 60A | 250VAC | 2P 3W | IP44 | C363P6SA | 63A | 220-240V~ | 3.80 | 97 | 6.00 | 153 | 10.04 | 255 | 2.83 | 72 | 7.44 | 189 |
| C460P6SA | 60A | 380-415VAC | 3P 4W | IP44 | C463P6SA | 63A | 380-415V~ | 3.80 | 97 | 6.00 | 153 | 10.04 | 255 | 2.83 | 72 | 7.40 | 193 |
| C460P9SA | 60A | 125/250VAC | 3P 4W | IP44 | C463P9SA | 63A | 125/250V~ | 3.80 | 97 | 6.00 | 153 | 10.04 | 255 | 2.83 | 72 | 7.40 | 193 |
| C560P6SA | 60A | 200-415VAC | 4P 5W | IP44 | C563P6SA | 63A | 200-415V~ | 3.80 | 97 | 6.00 | 153 | 10.04 | 255 | 2.83 | 72 | 7.40 | 193 |
| C560P9SA | 60A | 3ØY 120/208VAC | 4P 5W | IP44 | C563P9SA | 63A | 3ØY 120/208V~ | 3.80 | 97 | 6.00 | 153 | 10.04 | 255 | 2.83 | 72 | 7.40 | 193 |

LIST OF PARTS

| DESCRIPTION | MATERIAL | FINISH |
|---|---|---|
| PLUG HOUSING | PBT | |
| EXTERNAL CORD CLAMP | PBT/PC | |
| PIN HOLDER | NYLON GF | |
| CONTACT PINS | BRASS | |
| LOCKING RING | PBT/PC | |
| CONTACT CARRIER | NYLON GF | |
| GROMMET | TPE | |
| ASSEMBLY SCREWS | ST. STEEL | |

| REV | DESCRIPTION | APP | DATE |
|---|---|---|---|
| 3 | MOVED CABLE RANGE INFO FROM NOTE 3 TO SEPARATE TABLE; ADDED RANGES FOR UL AND VDE PER EC 200521113048 MJV CAC | | 05/01/20 |
| 2 | ADDED NEW ROW FOR CAT. C320P4SA ON SHEET 2 PER EC 200110070227 MJV | | 12/05/19 |
| 1 | NEW RELEASE PER DCN 24432 AD CAC | | 01/14/19 |

THE DESIGN AND DIMENSIONS OF THE PRODUCT SHOWN ON THIS DRAWING ARE SUBJECT TO CHANGE WITHOUT NOTICE. DIMENSIONS ARE IN INCHES [mm].

TITLE

SPLASHPROOF PLUG 16A, 20A, 30A, 32A, 60A, 63A, 100A, 125A

WIRING DEVICE-KELLEMS
HUBBELL INCORPORATED
SHELTON, CT

TOLERANCES UNLESS OTHERWISE SPECIFIED
.XX = ± .01
.XXX= ± .005
ANGLE TOL. ±2°

DR. BY AD | SCALE
CHK. BY CAC | DATE 12/4/18

DIMENSION SHEET FOR CAT. NO.
SEE TABLES ON SHEET 2 AND 3

B

M-14031

3

CAGE CODE 74545