M-14120 | 1

CONCENTRIC KNOCKOUTS	
STYLE	TRADE SIZE
A	1/2", 3/4", 1", 1-1/4"
B	3/4", 1", 1-1/4" SEE NOTES 8 & 9

LIST OF PARTS		
DESCRIPTION	MATERIAL	FINISH
BOX ASSEMBLY	16 GA. STEEL	ZINC **
TOP MOUNTING ASSY	14 GA. STEEL	ZINC
GROUND WIRES	COPPER	
WIRING CHANNEL	16 GA. STEEL	ZINC
FASTENERS	STEEL	ZINC
FLUSH TEMP COVER	16 GA. STEEL	ZINC
RAISED TEMP COVER	THERMOPLASTIC	YELLOW

** CATALOG NO. CFB2G30CRE BOX ASSEMBLY IS GALVANIZED AND GREEN EPOXY COATED ON EXTERIOR SURFACE.

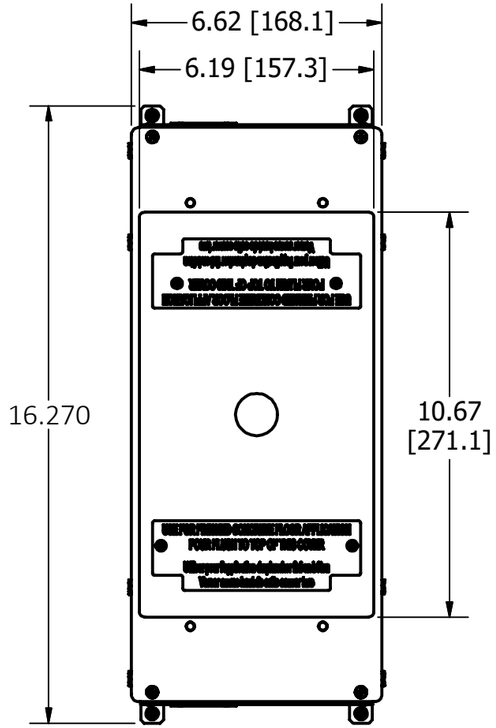

TOP VIEW

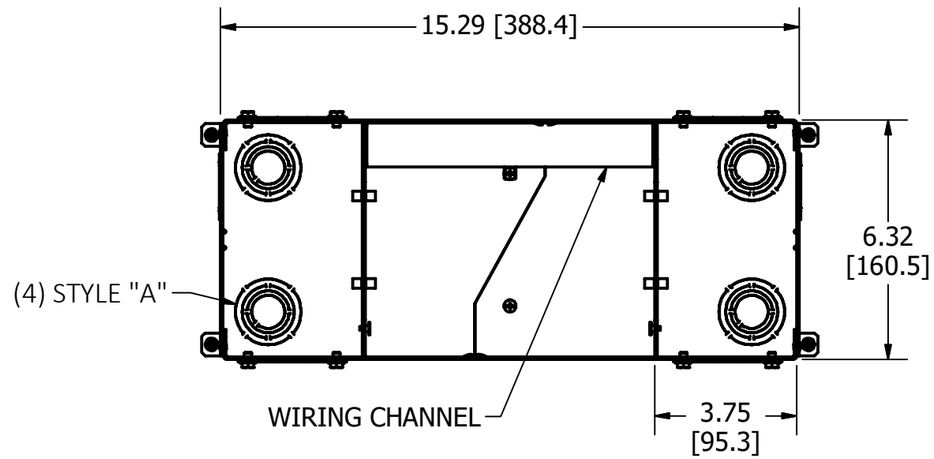

SECTION A-A
VIEW THROUGH BOX BELOW TOP

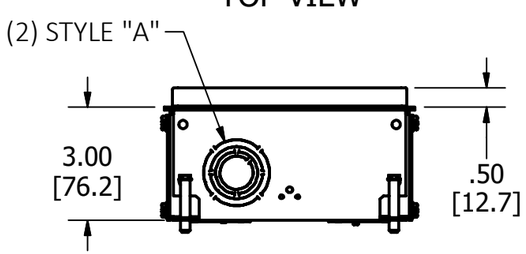

END VIEW

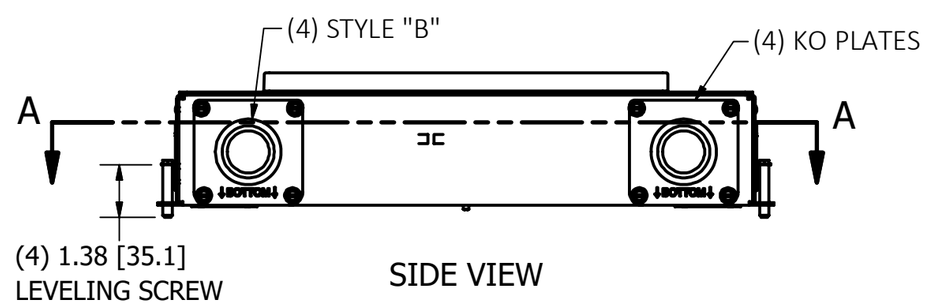

SIDE VIEW

NOTES:
1. ALL DIMENSIONS ARE IN INCHES AND [MILLIMETERS].
2. PRODUCT IS cULus LISTED. COMPLIES WITH UL 514A.
3. EACH GANG SUPPLIED WITH 6" [152.4] 12 GA. AWG GROUND PIGTAIL.
4. MINIMUM CONCRETE POUR: 3.00" [76.2].
5. WIRING CHAMBER VOLUMES (RECESSED COVER): (2) 56.5 IN³ [926 CM³].
6. WIRING CHAMBER VOLUMES (FURNITURE FEED): (2) 112.5 IN³ [1827.3 CM³].
7. WIRING CHANNEL AREA: .83 IN² [535 MM²].
8. METALLIC CONDUIT HUBS (CFBHUB2) MAY BE USED IN PLACE OF KO PLATES, SOLD SEPARATELY.
9. NON-METALLIC CONDUIT HUBS (CFBHUB125PVC, CFBHUB200PVC) MAY BE USED IN PLACE OF KO PLATES, SOLD SEPARATELY.

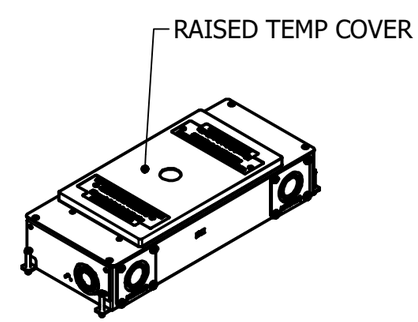

ISOMETRIC

REV	DESCRIPTION	APP	DATE
1	ORIGINAL RELEASE PER 210929012903	SBW	2/2/22

THE DESIGN AND DIMENSIONS OF THE PRODUCT SHOWN ON THIS DRAWING ARE SUBJECT TO CHANGE WITHOUT NOTICE. DIMENSIONS ARE IN INCHES [mm].

TITLE CONCRETE FLOOR BOX, 2 GANG EXTENDED, FOR RECTANGULAR COVER, DEEP

WIRING DEVICE-KELLEMS
HUBBELL INCORPORATED
SHELTON, CT

TOLERANCES UNLESS OTHERWISE SPECIFIED
.XX = ± .01
.XXX= ± .005
ANGLE TOL. ±2°

DR. BY SBW | SCALE 1/4
CHK. BY | DATE 2/8/2021

DIMENSION SHEET FOR CAT. NO.
CFB2G30E, CFB2G30CRE

B
M-14120
1

CAGE CODE 74545