M-14139 | 1

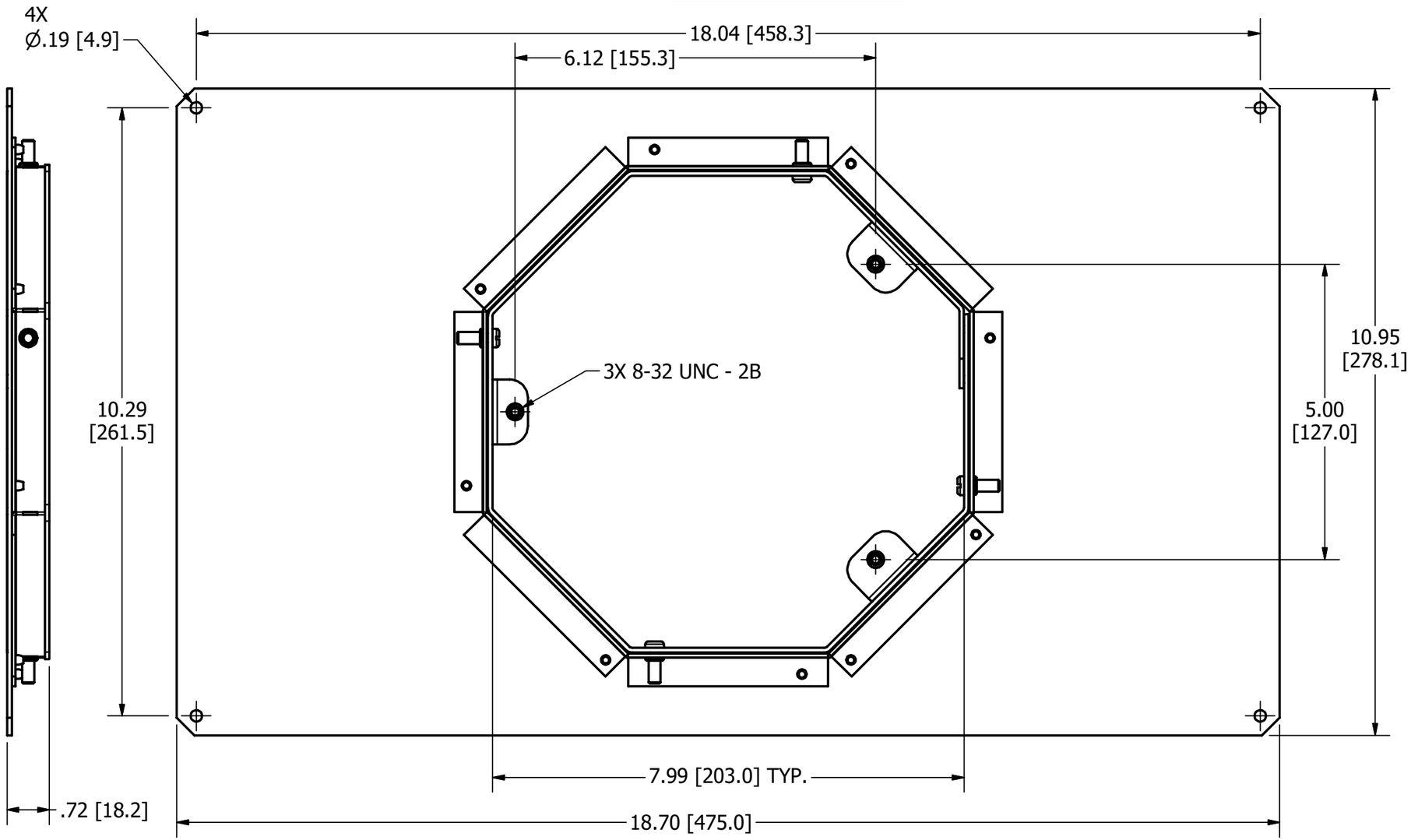

TEMPORARY CONCRETE COVER NOT SHOWN

NOTES:
1. ALL DIMENSIONS ARE IN INCHES AND [MILLIMETERS].
2. PRODUCT IS cULus LISTED. COMPLIES WITH UL 514A.
3. USE WITH RECESSED 6-GANG CONCRETE FLOOR BOXES (CFB6GxxE), SOLD SEPARATELY.
4. USE WITH SYSTEM 1 RECESSED 8 INCH COVERS (S1R8CVRxx), SOLD SEPARATELY.
5. MOUNTING HARDWARE INCLUDED.

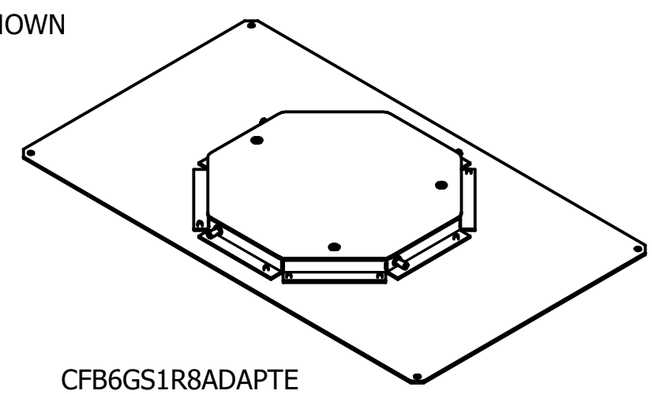

CFB6GS1R8ADAPTE

CAGE CODE 74545

LIST OF PARTS

DESCRIPTION	MATERIAL	FINISH
ADAPTER PLATE	14 GA. STEEL	ZINC
ANGLE BRACKETS	16 GA. STEEL	ZINC
COLLAR	16 GA. STEEL	ZINC
HARDWARE	STEEL	ZINC

DIMENSION SHEET FOR CAT. NO.
CFB6GS1R8ADAPTE

SYM	DESCRIPTION	APP	DATE
1	ORIGINAL RELEASE PER 210929012903	SBW	2/2/22

THE DESIGN AND DIMENSIONS OF THE PRODUCT SHOWN ON THIS DRAWING ARE SUBJECT TO CHANGE WITHOUT NOTICE. DIMENSIONS ARE IN INCHES [mm].

TITLE

TRANSITION ASSEMBLY, 6 GANG, CFBE

WIRING DEVICE-KELLEMS
HUBBELL INCORPORATED
SHELTON, CT

TOLERANCES UNLESS OTHERWISE SPECIFIED
.XX = ± .01
.XXX= ± .005
ANGLE TOL. ±2'

DR. BY	VKK	SCALE	1 : 2
CHK. BY	SBW	DATE	02/08/22

B

M-14139

1