M-14154 | 1

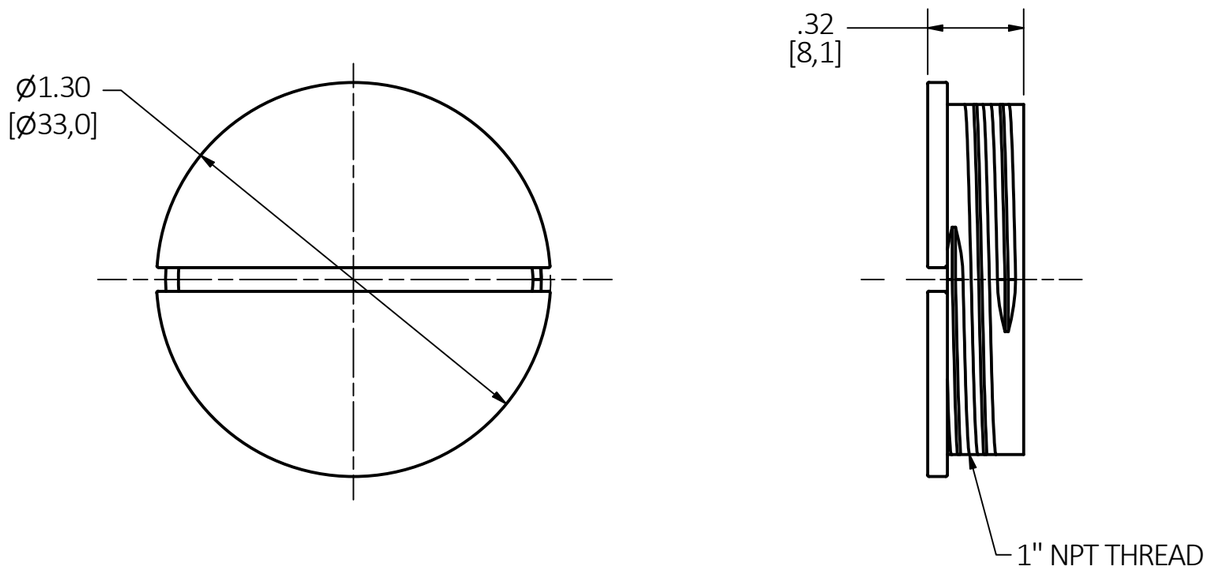

CATALOG NUMBER	FINISH
S1RPLUG100ALU	BRUSHED ALUMINUM
S1RPLUG100BLK	BLACK POWDER COAT
S1RPLUG100BRS	BRASS PLATED
S1RPLUG100BRZ	BRONZE PLATED
S1RPLUG100GRY	GRAY POWDER COAT
S1RPLUG100NKL	SATIN NICKEL PLATED

NOTES:
1. ALL DIMENSIONS ARE IN INCHES AND [MILLIMETERS].
2. PRODUCT IS cULus LISTED.

CAGE CODE 74545

LIST OF PARTS

DESCRIPTION	MATERIAL	FINISH
CLOSURE PLUG	ZINC	SEE TABLE

REV	DESCRIPTION	APP	DATE
1	RELEASED PER DCN200430105554	AD	4/30/20

THE DESIGN AND DIMENSIONS OF THE PRODUCT SHOWN ON THIS DRAWING ARE SUBJECT TO CHANGE WITHOUT NOTICE.

TITLE

1" CLOSURE PLUG

WIRING DEVICE-KELLEMS
HUBBELL INCORPORATED
SHELTON, CT

TOLERANCES UNLESS OTHERWISE SPECIFIED
.XX = ± .01
.XXX= ± .005
ANGLE TOL. ±2°

DR. BY AD
CHK. BY
SCALE 2 : 1
DATE 8/23/19

DIMENSION SHEET FOR CAT. NO.
SEE TABLE

B

M-14154

1