M-14325 | 1

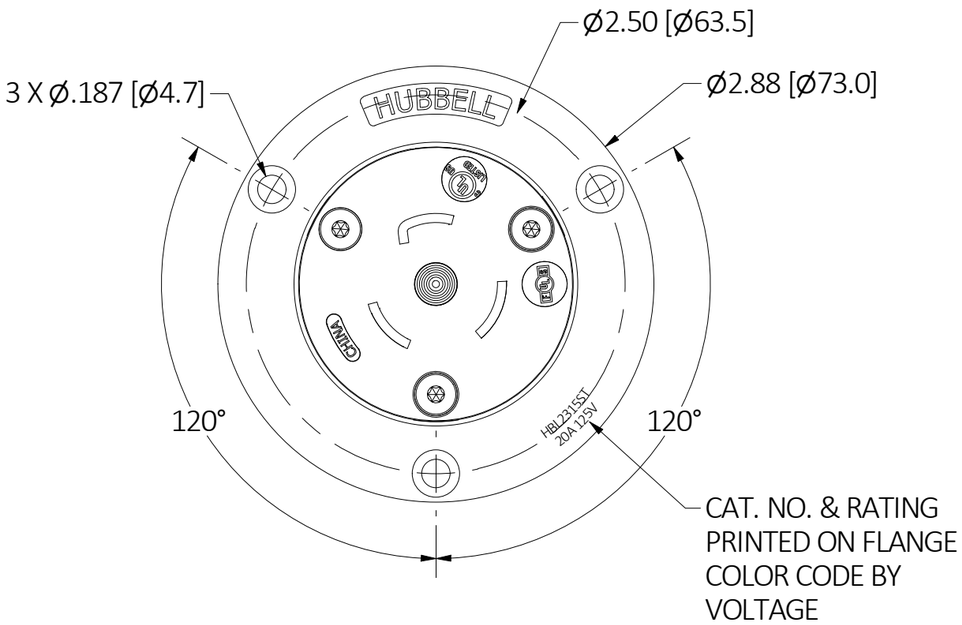

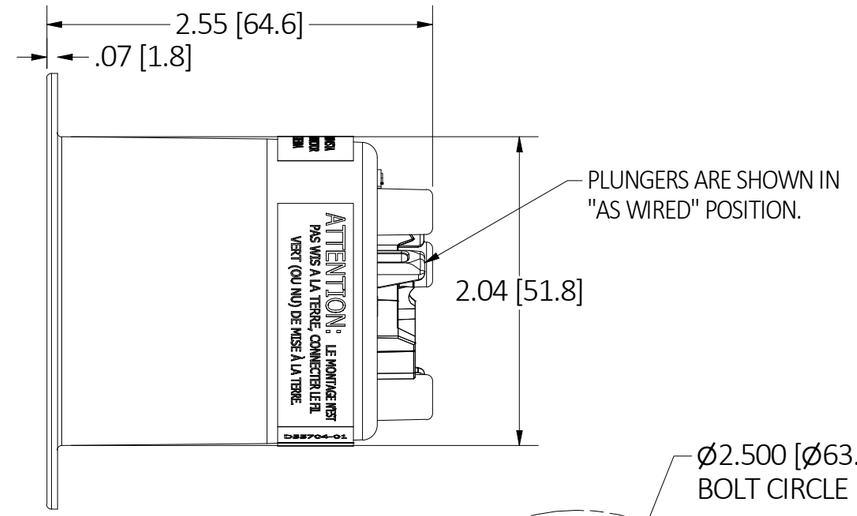

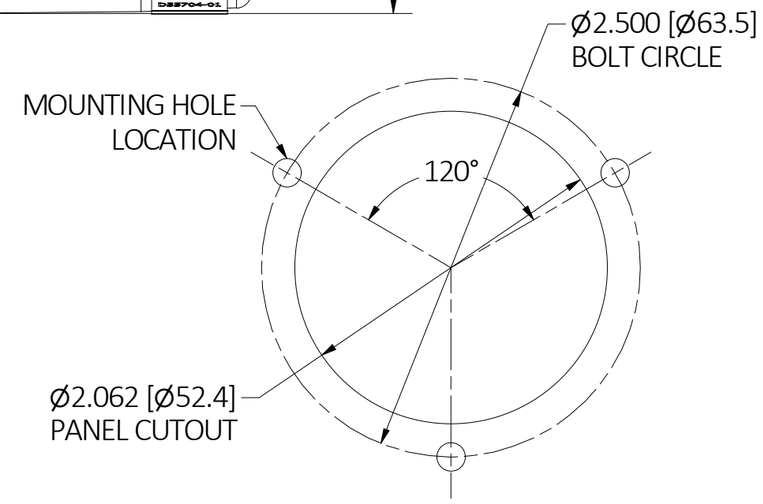

PANEL CUTOUT DETAIL

LIST OF PARTS		
DESCRIPTION	MATERIAL	FINISH
CASING	NYLON	NATURAL
BLADE HOLDER	NYLON	NATURAL
RETAINER	NYLON	BLACK
BLADE	COPPER ALLOY	
SPRING	STAINLESS STEEL	
PLUNGER	NYLON	
ASSEMBLY FASTENERS	STEEL	ZINC PLATE

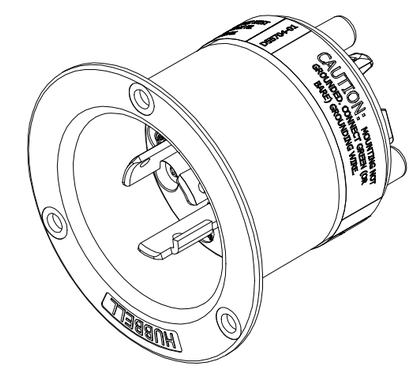

CATALOG NO. HBL2315
NOT SHOWN TO SCALE

NEMA NO.	RATING	POLE/WIRE	CAT. NO.	CONFIGURATION	VOLTAGE COLOR CODE
L5-20P	125V	2P/3W GROUNDING	HBL2315ST		YELLOW
L6-20P	250V	2P/3W GROUNDING	HBL2325ST		BLUE
L7-20P	277VAC	2P/3W GROUNDING	HBL2335ST		GRAY
L8-20P	480VAC	2P/3W GROUNDING	HBL2345ST		RED

NOTES (UNLESS OTHERWISE SPECIFIED):

1. DIMENSIONS ARE IN INCHES [mm].
2. ALL DEVICES ARE cULus LISTED & FED SPEC.
3. WIRING TERMINAL ACCOMMODATION:
   a. SOLID WIRE: 14 AWG - 10 AWG COPPER WIRE ONLY
   b. STRANDED WIRE (INCLUDING COMPACT STRANDED): 14 AWG - 8 AWG COPPER WIRE ONLY
4. CONDUCTOR STRIP LENGTH: ¾" (19 mm).
5. MOUNTING HOLES IN FLANGE ARE SIZED FOR #8 SCREWS. MOUNTING SCREWS NOT SUPPLIED.
6. CATALOG NUMBERS & RATING ARE PAD PRINTED ON THE FLANGE OF THE DEVICE, COLOR CODED BY VOLTAGE.

REV	DESCRIPTION	APP	DATE
1	INITIAL RELEASE PER DCN 220401018715 AM	AM	05/18/22

THE DESIGN AND DIMENSIONS OF THE PRODUCT SHOWN ON THIS DRAWING ARE SUBJECT TO CHANGE WITHOUT NOTICE. DIMENSIONS ARE IN INCHES [mm].

TITLE

20A 3-WIRE TWIST-LOCK® EDGE SCREWLESS TERMINATION INLET

WIRING DEVICE-KELLEMS
HUBBELL INCORPORATED
SHELTON, CT

TOLERANCES UNLESS OTHERWISE SPECIFIED
.XX = ± .01
.XXX= ± .005
ANGLE TOL. ±2˚

DR. BY	AM	SCALE	1 : 1
CHK. BY	MAM	DATE	04/29/22

CAGE CODE 74545

DIMENSION SHEET FOR CAT. NO.
HBL2315ST, HBL2325ST, HBL2335ST, HBL2345ST

B

M-14325

1