M-14362 | 1

TECHNICAL:

RATED VOLTAGE: 120 VAC
OPERATING VOLTAGE RANGE: 85% TO 110% OF RATED.
CURRENT: UP TO 20 AMPS.
FREQUENCY: 60Hz.
TRIP LEVEL: 5mA ± 1mA;
PHASE : SINGLE.
RESPONSE TIME: 25 mS MAX AT 500 ohm FAULT.
DIELECTRIC WITHSTAND: 1,500 VRMS ACROSS CONTACT;
4,000 VRMS BETWEEN CONDUCTORS AND ENCLOSURE
SURGE WITHSTAND: 4KV/2KA PER IEC 61000-4-5
OPERATING TEMPERATURE RANGE: -35°C TO +66°C.
LEAKAGE CURRENT @93% HUMIDITY: ZERO.
OVERLOAD CURRENT: 90 AMPS, 0.45 PF
RF NOISE SUSCEPTIBILITY: NORMAL OPERATION WITH 0.5 VRMS INJECTED ON POWER LINE WITH FREQUENCIES UP TO 230 MHz.
LET GO LINE VOLTAGE: 60% OF RATED.
GROUNDED NEUTRAL DETECTION: 2 OHMS OR LESS.

GENERAL:

CONSTRUCTION: COMMERCIAL GRADE DESIGN.
TYPE: CLASS A
POWER-UP TYPE: MANUAL
ENDURANCE: 3,000 OPERATIONS MINIMUM.
OPEN NEUTRAL PROTECTION: TRIPS UPON LOSS OF NEUTRAL.
GROUNDED NEUTRAL PROTECTION: TRIPS IF GROUND AND NEUTRAL TOUCH AT LOAD SIDE.
POWER ON INDICATION: LIGHTED GREEN LED.
POWER OFF INDICATION: BLINKING RED LED.
ENCLOSURE: RAIN PROOF, 3R
MOUNTING TYPE: PORTABLE.
WIRING APPLICATION: 3 WIRE SINGLE PHASE (HOT, NEUTRAL, GROUND)
SWITCH INTERFACE: DOUBLE INSULATED.
LATCHING MECHANISM: ELECTROMAGNETIC.
FALSE TRIP DUE TO IMPACT: NONE.
AGENCY APPROVAL: c-UL-us

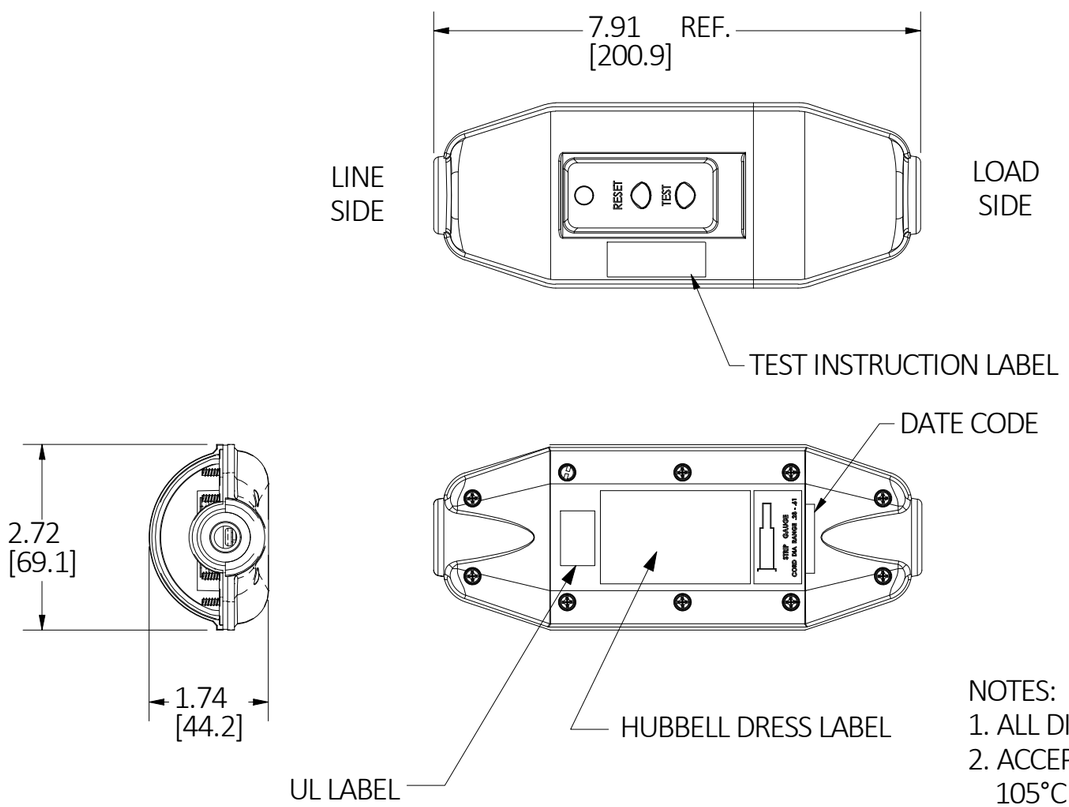

NOTES:
1. ALL DIMENSIONS ARE IN INCHES [mm].
2. ACCEPT INDOOR/OUTDOOR 3-CONDUCTOR 105°C MIN. UL, cUL, CSA APPROVED CABLE OD RANGE .40" TO .61" [10.2mm TO 15.5mm]. MAX. ALLOWABLE 12/3 AWG OF TYPE SJTW, SJTOW, or SJOW.
3. CORD GROMMET AND CRAMP INCLUDED.

LIST OF PARTS

DESCRIPTION	MATERIAL	FINISH

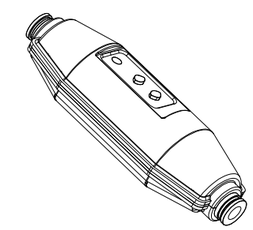

REV	DESCRIPTION	APP	DATE
1	12/05/22 NEW RELEASE PER DCN#221205026075. D.LI		12/05/22

THE DESIGN AND DIMENSIONS OF THE PRODUCT SHOWN ON THIS DRAWING ARE SUBJECT TO CHANGE WITHOUT NOTICE. DIMENSIONS ARE IN INCHES [mm].

TITLE
20A 120VAC FIELD WIRE, GFCI MODEL, MANUAL

WIRING DEVICE-KELLEMS
HUBBELL INCORPORATED
SHELTON, CT

TOLERANCES UNLESS OTHERWISE SPECIFIED
.XX = ± .01
.XXX= ± .005
ANGLE TOL. ±2°

DR. BY D.LI
CHK. BY
SCALE NONE
DATE 8/11/22

CAGE CODE 74545

DIMENSION SHEET FOR CAT. NO. GFP20FWM

B

M-14362

1