M-14364 | 1

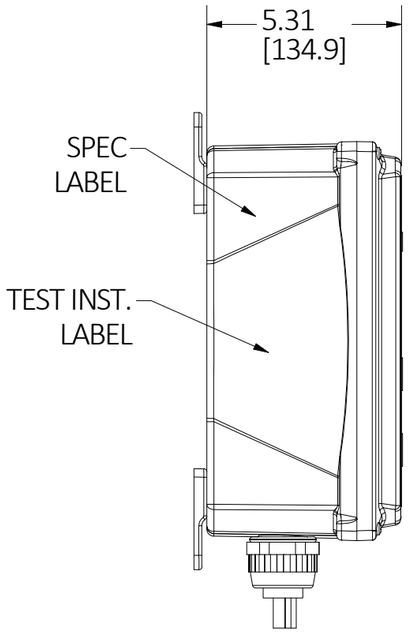

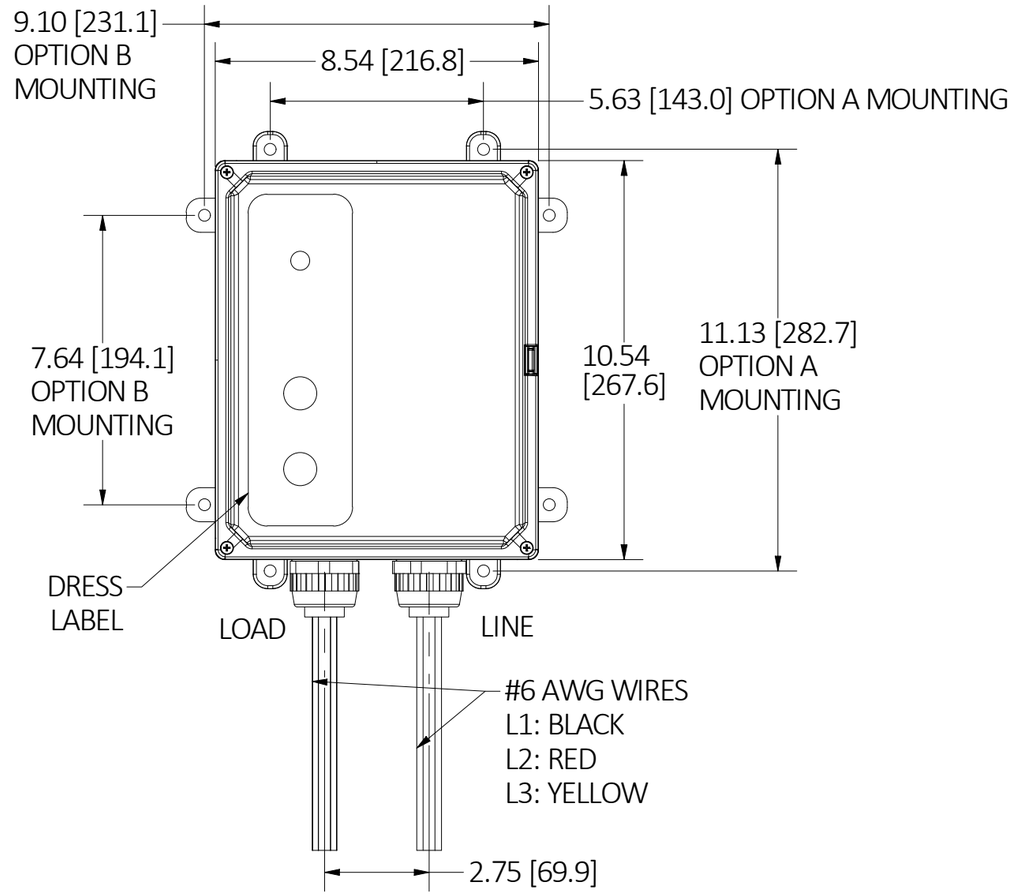

NOTE: ALL DIMENSIONS ARE IN INCHES [mm].

TECHNICAL:

RATED VOLTAGE: 208VAC (MAX. 150V TO GROUND).
OPERATING VOLTAGE RANGE: 85% TO 110% OF RATED.
CURRENT: UP TO 60 AMPS or DEVICE RATING.
HORSEPOWER: UP TO 20HP 3Ø/7.5HP 1Ø
FREQUENCY: 60Hz.
TRIP LEVEL: 5mA ± 1mA;
PHASE : THREE.
RESPONSE TIME: 25 mS MAX AT 500 ohm FAULT.
DIELECTRIC WITHSTAND: 1,500VRMS ACROSS CONTACT;
4,000 VRMS BETWEEN CONDUCTORS AND ENCLOSURE.
SURGE WITHSTAND: 4KV/2KA 20-TIMES PER IEC 61000-4-5
OPERATING TEMPERATURE RANGE: -35°C TO +50°C.
LEAKAGE CURRENT @93% HUMIDITY: ZERO.
OVERLOAD CURRENT: 360 AMPS, 0.45 PF
RF NOISE SUSCEPTIBILITY: NORMAL OPERATION WITH 0.5 VRMS INJECTED ON
POWER LINE WITH FREQUENCIES UP TO 230 MHz.
LET GO LINE VOLTAGE: 60% OF RATED.
GROUNDED NEUTRAL DETECTION: 2 OHMS OR LESS.

CAGE CODE 74545

GENERAL:

CONSTRUCTION: INDUSTRIAL GRADE DESIGN.
TYPE: CLASS A; SELF TESTING
POWER-UP TYPE: AUTOMATIC.
ENDURANCE: 3,000 OPERATIONS MINIMUM.
OPEN NEUTRAL PROTECTION: TRIPS UPON LOSS OF NEUTRAL
GROUNDED NEUTRAL PROTECTION: TRIPS IF GROUND AND NEUTRAL
TOUCH AT LOAD SIDE.
POWER ON INDICATION: LIGHTED GREEN + YELLOW LED.
POWER OFF INDICATION: RED LED.
ENCLOSURE: TYPE 4X.
MOUNTING TYPE: PANEL OR SURFACE.
WIRING APPLICATION: 3 POLE, 4 WIRE, THREE PHASE [LINE 1 (L1),
LINE 2(L2), LINE 3(L3), GROUND].
SWITCH INTERFACE: DOUBLE INSULATED.
LATCHING MECHANISM: ELECTROMAGNETIC.
FALSE TRIP DUE TO IMPACT: NONE.
AGENCY APPROVAL: cULus

LIST OF PARTS

DESCRIPTION	MATERIAL	FINISH

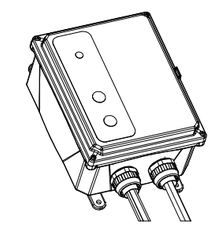

REV	DESCRIPTION	APP	DATE
1	1/18/23 NEW RELEASE PER DCN#221205026075. D.LI		01/18/23

THE DESIGN AND DIMENSIONS OF THE PRODUCT SHOWN ON THIS DRAWING ARE SUBJECT TO CHANGE WITHOUT NOTICE. DIMENSIONS ARE IN INCHES [mm].

TITLE

60A 208VAC PERM, AUTO

WIRING DEVICE-KELLEMS
HUBBELL INCORPORATED
SHELTON, CT

TOLERANCES UNLESS OTHERWISE SPECIFIED
.XX = ± .01
.XXX= ± .005
ANGLE TOL. ±2'

DR. BY	D.LI	SCALE	1 / 4
CHK. BY		DATE	10/18/22

DIMENSION SHEET FOR CAT. NO.
GFHW86108

B

M-14364

1