M-14365 | 1

TECHNICAL:

RATED VOLTAGE: 208VAC.
OPERATING VOLTAGE RANGE: 85% TO 110% OF RATED.
CURRENT: UP TO 30 AMPS.
FREQUENCY: 60Hz.
TRIP LEVEL: 5mA ± 1mA;
PHASE : THREE.
RESPONSE TIME: 25 mS MAX AT 500 ohm FAULT.
DIELECTRIC WITHSTAND: 1,500VRMS ACROSS CONTACT;
4,000 VRMS BETWEEN CONDUCTORS AND ENCLOSURE.
SURGE WITHSTAND: 4KV/2KA PER IEC 61000-4-5
OPERATING TEMPERATURE RANGE: -35°C TO +66°C.
LEAKAGE CURRENT @93% HUMIDITY: ZERO.
OVERLOAD CURRENT: 180 AMPS, 0.45 PF
RF NOISE SUSCEPTIBILITY: NORMAL OPERATION WITH 0.5 VRMS INJECTED ON POWER LINE WITH FREQUENCIES UP TO 230 MHz.
LET GO LINE VOLTAGE: 60% OF RATED.
GROUNDED NEUTRAL DETECTION: 2 OHMS OR LESS.

GENERAL:

CONSTRUCTION: INDUSTRIAL GRADE DESIGN.
TYPE: CLASS A; SELF TESTING
POWER-UP TYPE: AUTOMATIC.
ENDURANCE: 3,000 OPERATIONS MINIMUM.
OPEN NEUTRAL PROTECTION: TRIPS UPON LOSS OF NEUTRAL
GROUNDED NEUTRAL PROTECTION: TRIPS IF GROUND AND NEUTRAL TOUCH AT LOAD SIDE (ON APPLICABLE MODELS)
POWER ON INDICATION: LIGHTED GREEN LED.
POWER OFF INDICATION: BLINKING RED LED.
ENCLOSURE: TYPE 4X.
MOUNTING TYPE: PANEL OR SURFACE.
WIRING APPLICATION: THREE PHASE [LINE 1 (L1), LINE 2(L2), LINE 3(L3)].
SWITCH INTERFACE: DOUBLE INSULATED.
LATCHING MECHANISM: ELECTROMAGNETIC.
FALSE TRIP DUE TO IMPACT: NONE.
AGENCY APPROVAL: cULus, CSA-us

LIST OF PARTS

DESCRIPTION	MATERIAL	FINISH

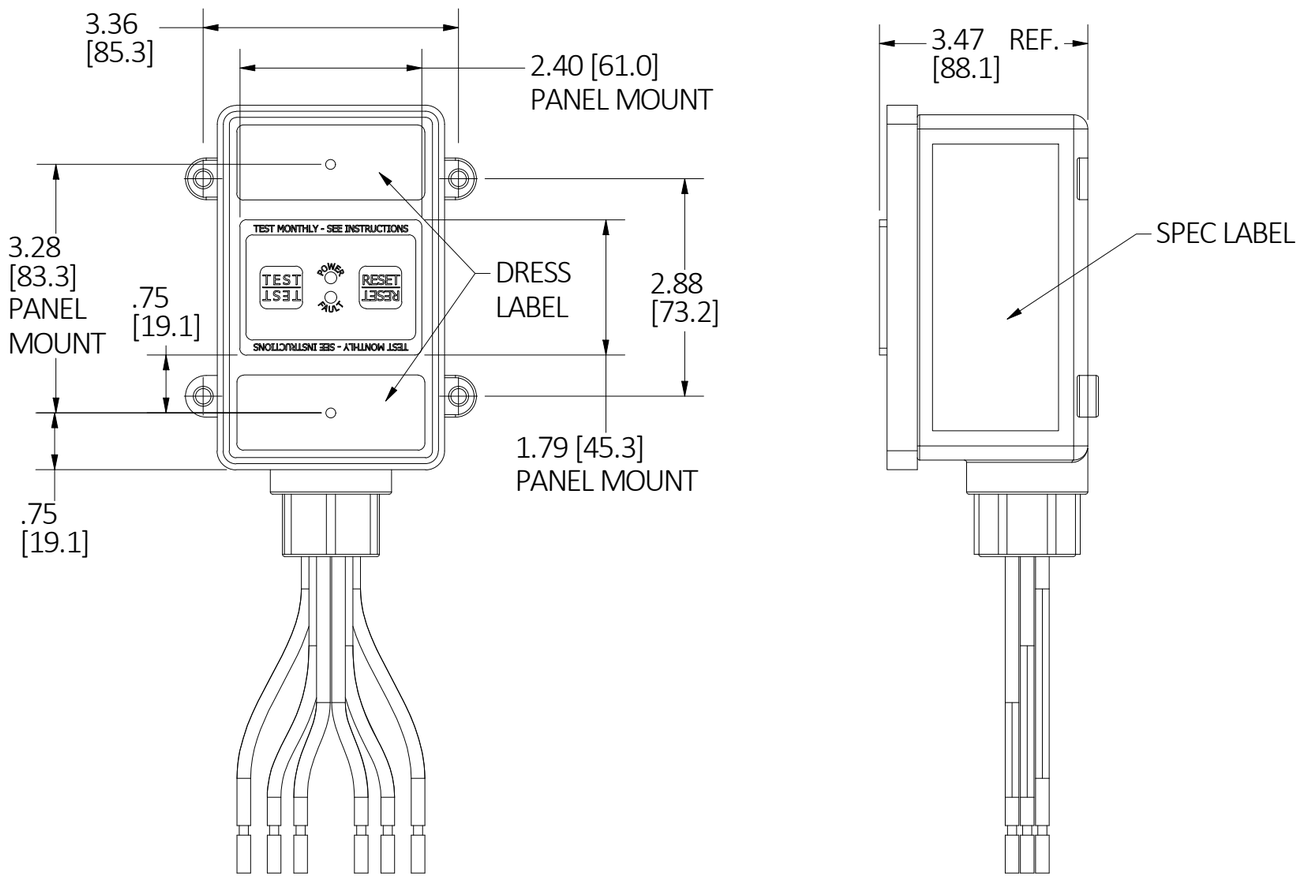

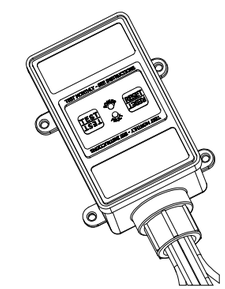

WIRE COLOR CODES		
COLOR	DESCRIPTION	
BLACK	LINE 1 (IN)	LINE
RED	LINE 2 (IN)	
ORANGE	LINE 3 (IN)	
BLACK WITH WHITE STRIPE	LINE 1 (OUT)	LOAD
RED WITH BLACK STRIPE	LINE 2 (OUT)	
ORANGE WITH BLACK STRIPE	LINE 3 (OUT)	

NOTE: ALL DIMENSIONS ARE IN INCHES [mm].

CAGE CODE 74545

REV	DESCRIPTION	APP	DATE
1	12/05/22 NEW RELEASE PER DCN#221205026075. D.LI		12/5/22

THE DESIGN AND DIMENSIONS OF THE PRODUCT SHOWN ON THIS DRAWING ARE SUBJECT TO CHANGE WITHOUT NOTICE. DIMENSIONS ARE IN INCHES [mm].

TITLE

30A 208VAC 3-PHASE GFCI AUTO

WIRING DEVICE-KELLEMS
HUBBELL INCORPORATED
SHELTON, CT

TOLERANCES UNLESS OTHERWISE SPECIFIED
.XX = ± .01
.XXX= ± .005
ANGLE TOL. ±2˚

DR. BY	D.LI	SCALE	1 / 2
CHK. BY		DATE	1/11/21

DIMENSION SHEET FOR CAT. NO.
GFHW83105

B

M-14365

1