M-14508 | 1

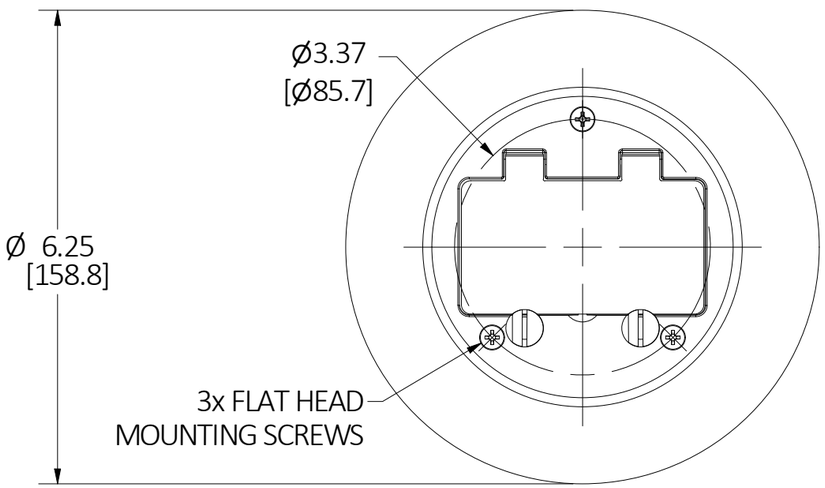

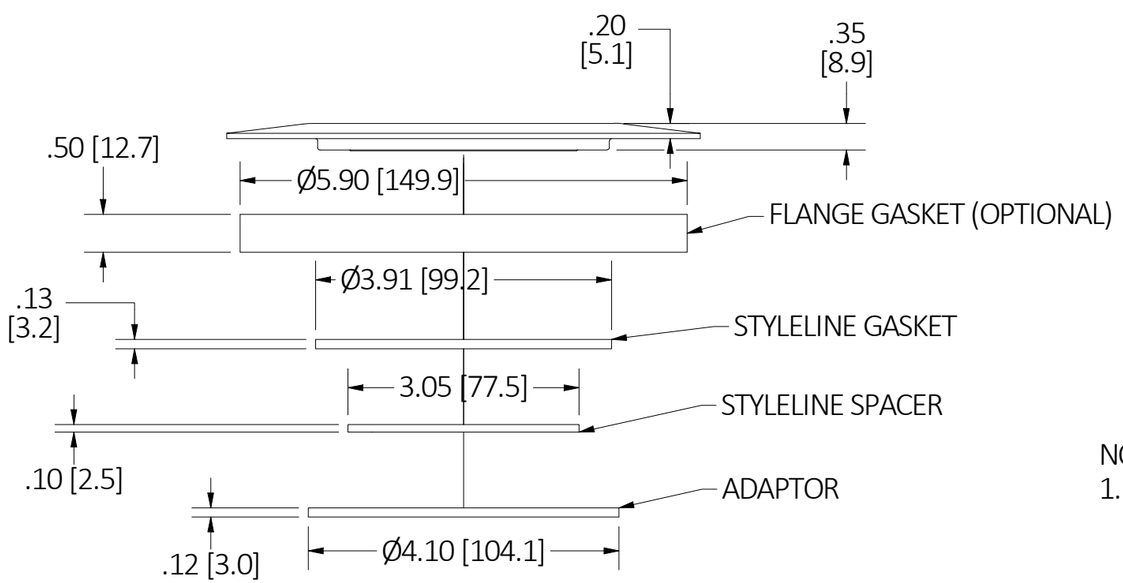

NOTES:
1. ALL DIMENSIONS ARE IN INCH [mm].

CAT.#	DESCRIPTION	SURFACE FINISH
SFA3926	COMBO CVR/FLNG, RND, ALU, RECT FLAP	BRUSHED ALUMINUM
SFB3926	COMBO CVR/FLNG, RND, BRS PLTD, RECT FLAP	BRUSHED BRASS

LIST OF PARTS

DESCRIPTION	MATERIAL	FINISH
FLANGE	ALUMINUM	SEE TABLE PER CAT.#
FLAP	ALUMINUM	SEE TABLE PER CAT.#
HINGE	STAINLESS STEEL	
LOCKING STUD	ALUMINUM	SEE TABLE PER CAT.#
ADAPTOR	STEEL	Zn. PLATE
SPACER	STEEL	Zn. PLATE
GASKET	NEOPRENE	

DIMENSION SHEET FOR CAT. NO.
SEE TABLE

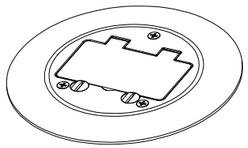

REV	DESCRIPTION	APP	DATE
1	NEW RELEASE PER DCN#220328018504.	D.LI	3/29/22

THE DESIGN AND DIMENSIONS OF THE PRODUCT SHOWN ON THIS DRAWING ARE SUBJECT TO CHANGE WITHOUT NOTICE. DIMENSIONS ARE IN INCHES [mm].

TITLE
COMBO COVER/FLANGE ROUND STYLELINE RECTANGULAR FLAP

WIRING DEVICE-KELLEMS
HUBBELL INCORPORATED
SHELTON, CT

TOLERANCES UNLESS OTHERWISE SPECIFIED
.XX = ± .01
.XXX= ± .005
ANGLE TOL. ±2'

DR. BY D.LI | SCALE 1 / 2
CHK. BY | DATE 3/17/22

B
M-14508
1

CAGE CODE 74545