M-14509 | 1

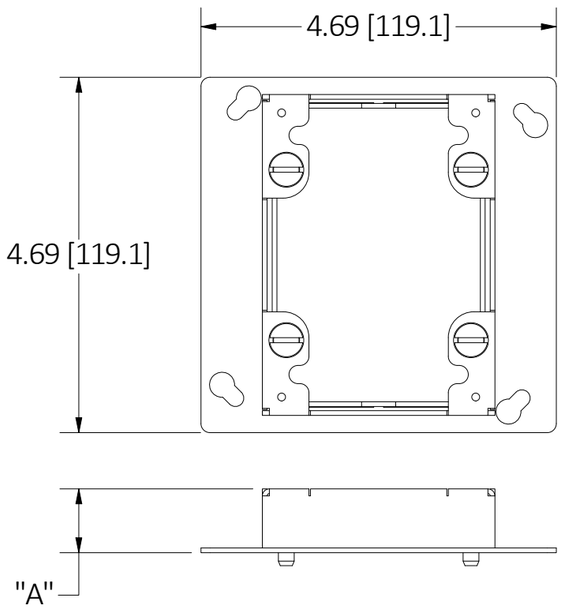

FBC2100 & FBC4100 - 1G ADJUSTABLE COLLAR

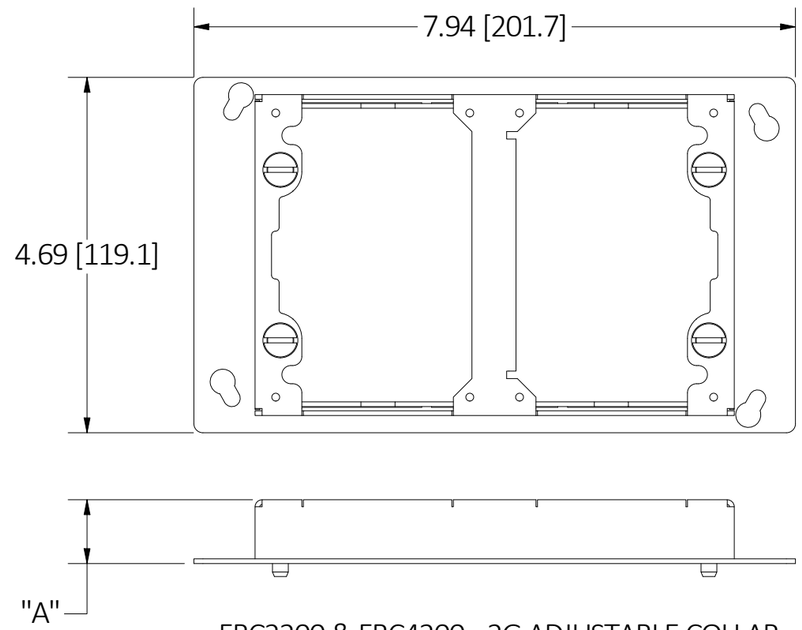

FBC2200 & FBC4200 - 2G ADJUSTABLE COLLAR

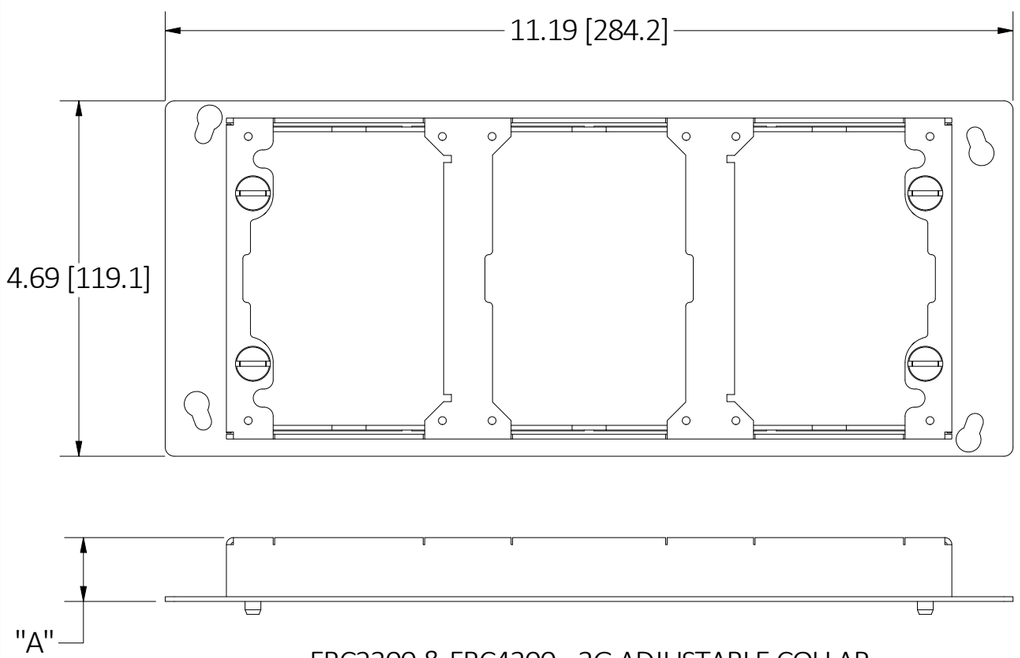

FBC2300 & FBC4300 - 3G ADJUSTABLE COLLAR

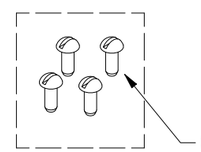

(4) #8-32 MOUNTING SCREWS PROVIDED.

TABLE 1

CAT. NO.	DESCRIPTION	DIM "A"	PRE/POST POUR ADJUSTMENT
FBC2100	REP FB COLAR, FB2431, FB2421	.84 [21.4]	1/2"
FBC2200	REP FB COLAR, FB2432, FB2422	.84 [21.4]	1/2"
FBC2300	REP FB COLAR, FB2433, FB2423	.84 [21.4]	1/2"
FBC4100	REP FB COLLAR, FB4133	1.22[30.9]	7/8"
FBC4200	REP FB COLLAR, FB4233	1.22[30.9]	7/8"
FBC4300	REP FB COLLAR, FB4333	1.22[30.9]	7/8"

NOTES:
1. ALL DIMENSIONS ARE IN INCHES [MM].

LIST OF PARTS

DESCRIPTION	MATERIAL	FINISH
ADJUSTABLE COLLAR	GALV. STEEL	-
ADAPTOR	STEEL	ZINC PLATE
SCREWS	STEEL	ZINC PLATE

DIMENSION SHEET FOR CAT. NO.
SEE TABLE 1

REV	DESCRIPTION	APP	DATE
1	INITIAL RELEASE WITH DCN #211214015266	SW	4/5/2021

THE DESIGN AND DIMENSIONS OF THE PRODUCT SHOWN ON THIS DRAWING ARE SUBJECT TO CHANGE WITHOUT NOTICE. DIMENSIONS ARE IN INCHES [mm].

TITLE

REP FB COLLAR

WIRING DEVICE-KELLEMS
HUBBELL INCORPORATED
SHELTON, CT

TOLERANCES UNLESS OTHERWISE SPECIFIED
.XX = ± .01
.XXX= ± .005
ANGLE TOL. ±2°

DR. BY	PSV	SCALE	1 : 2
CHK. BY	SW	DATE	4/5/22

B

M-14509

1

CAGE CODE 74545