M-14747 | 1

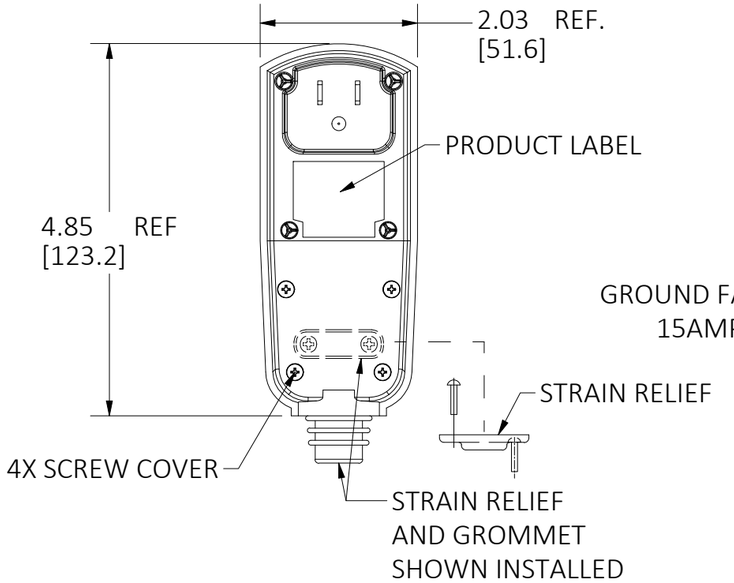

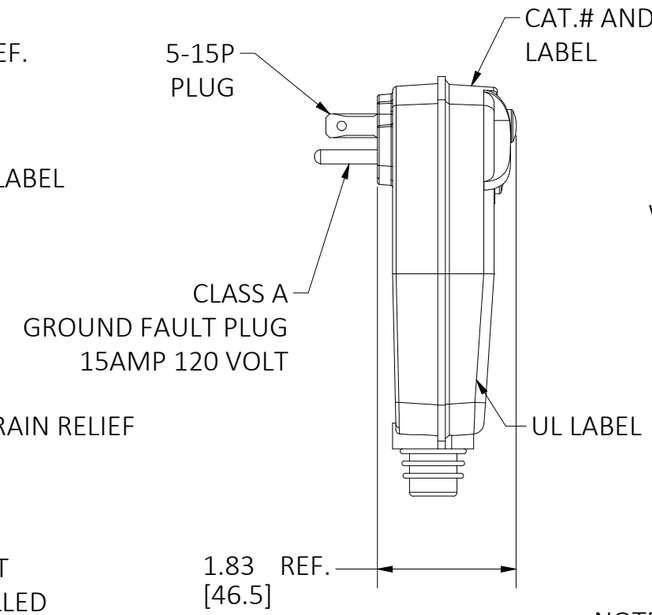

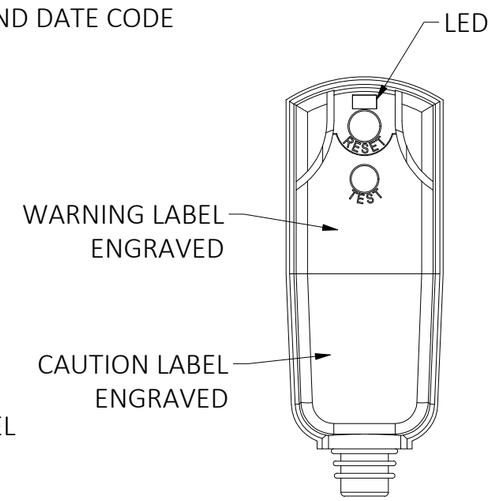

NOTES:
1, ASSEMBLY KIT INCLUDES (2) GROMMETS
(1) 14 AND 16 GA.
(1) 12 GA.
(1) 18 GA. (OPTIONAL, AVAILABLE IF REQUESTED)
NOTE: GROMMETS SHIPPED LOOSE ALONG WITH
(1) CABLE STRAIN RELIEF
(2) SCREWS PACKED IN A PLASTIC BAG.
(1) CORD LABEL
2. ALL DIMENSIONS ARE IN INCHES [mm].

TECHNICAL:

RATED VOLTAGE: 120 VAC
OPERATING VOLTAGE RANGE: 85% TO 110% OF RATED.
CURRENT: UP TO 15 AMPS.
FREQUENCY: 60Hz.
TRIP LEVEL: 5mA ± 1mA;
PHASE : SINGLE.
RESPONSE TIME: 25 mS MAX AT 500 ohm FAULT.
DIELECTRIC WITHSTAND: 1,500VRMS ACROSS CONTACT;
4,000 VRMS BETWEEN CONDUCTORS AND ENCLOSURE
SURGE WITHSTAND: 4KV/2KA PER IEC 61000-4-5
OPERATING TEMPERATURE RANGE: -35°C TO +66°C.
LEAKAGE CURRENT @93% HUMIDITY: ZERO.
OVERLOAD CURRENT: 90 AMPS, 0.45PF
RF NOISE SUSCEPTIBILITY: NORMAL OPERATION WITH 0.5 VRMS INJECTED ON
POWER LINE WITH FREQUENCIES UP TO 230 MHz.
LET GO LINE VOLTAGE: 60% OF RATED.
GROUNDED NEUTRAL DETECTION: 2 OHMS OR LESS.

CAGE CODE 74545

GENERAL:

CONSTRUCTION: COMMERCIAL GRADE DESIGN.
TYPE: CLASS A SELF TESTING
POWER-UP TYPE: MANUAL
ENDURANCE: 3,000 OPERATIONS MINIMUM.
OPEN NEUTRAL PROTECTION: TRIPS UPON LOSS OF NEUTRAL.
GROUNDED NEUTRAL PROTECTION: TRIPS IF GROUND AND NEUTRAL
CONNECT AT LOAD SIDE.
POWER ON INDICATION: LIGHTED GREEN LED.
ENCLOSURE: RAIN PROOF, 3R
MOUNTING TYPE: PORTABLE.
WIRING APPLICATION: 3 WIRE SINGLE PHASE (HOT, NEUTRAL,
GROUND)
SWITCH INTERFACE: DOUBLE INSULATED
LATCHING MECHANISM: ELECTROMAGNETIC
FALSE TRIP DUE TO IMPACT: NONE
AGENCY APPROVAL: c-UL-us

LIST OF PARTS

DESCRIPTION	MATERIAL	FINISH
HOUSING	THERMOPLASTIC	BLACK
BLADES	BRASS	
RESET BUTTON	THERMOPLASTIC	GREEN
TEST BUTTON	THERMOPLASTIC	BLUE
GROMMET	ELASTOMER	BLACK
STRAIN RELIEF	STEEL	ZINC PLATED
SCREWS	STEEL	ZINC PLATED

REV	DESCRIPTION	APP	DATE
1	NEW RELEASE PER DCN#230920033470. D.LI		10/17/23

THE DESIGN AND DIMENSIONS OF THE PRODUCT SHOWN ON THIS DRAWING ARE SUBJECT TO CHANGE WITHOUT NOTICE. DIMENSIONS ARE IN INCHES [mm].

TITLE
15A 120VAC GFCI PLUG, MANUAL RESET, BRYANT

WIRING DEVICE-KELLEMS
HUBBELL INCORPORATED
SHELTON, CT

TOLERANCES UNLESS OTHERWISE SPECIFIED
.XX = ± .01
.XXX= ± .005
ANGLE TOL. ±2'

DR. BY D.LI | SCALE 1 / 2
CHK. BY | DATE 10/17/23

DIMENSION SHEET FOR CAT. NO.
GFPST15MA

B

M-14747

1