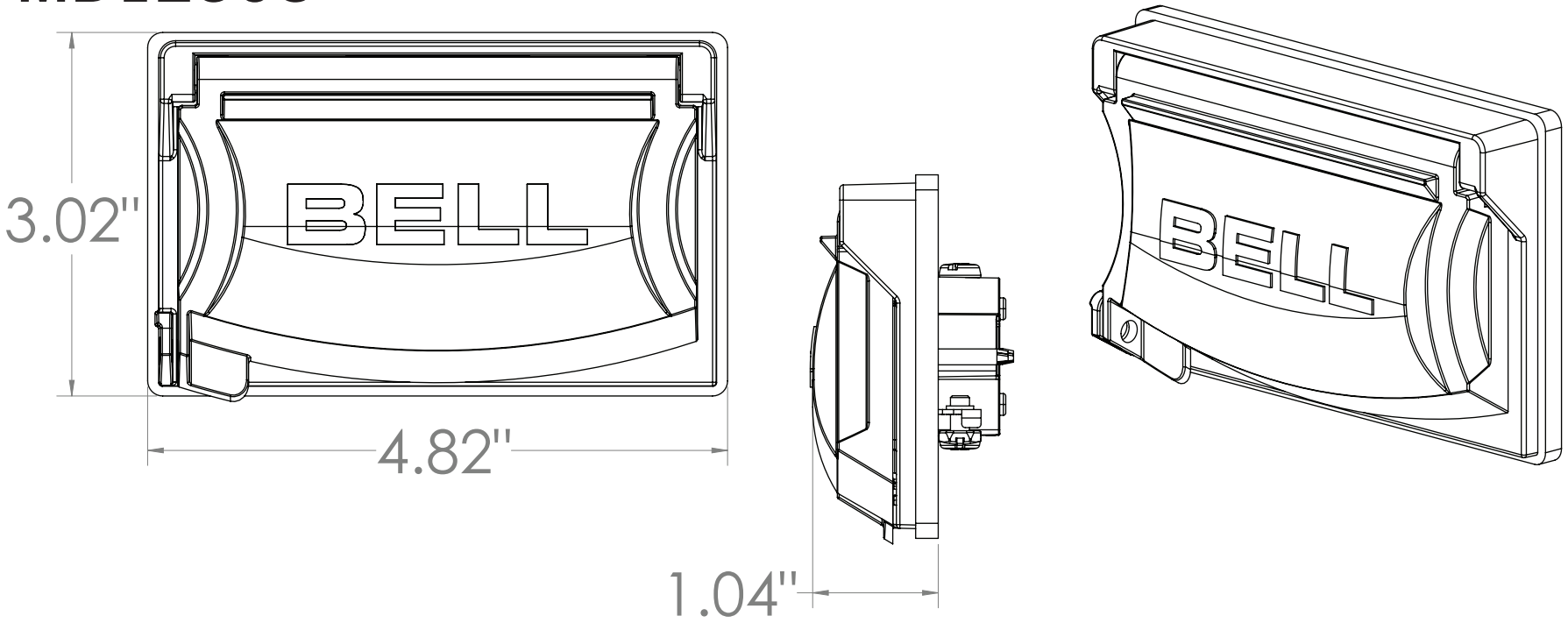MD1250S