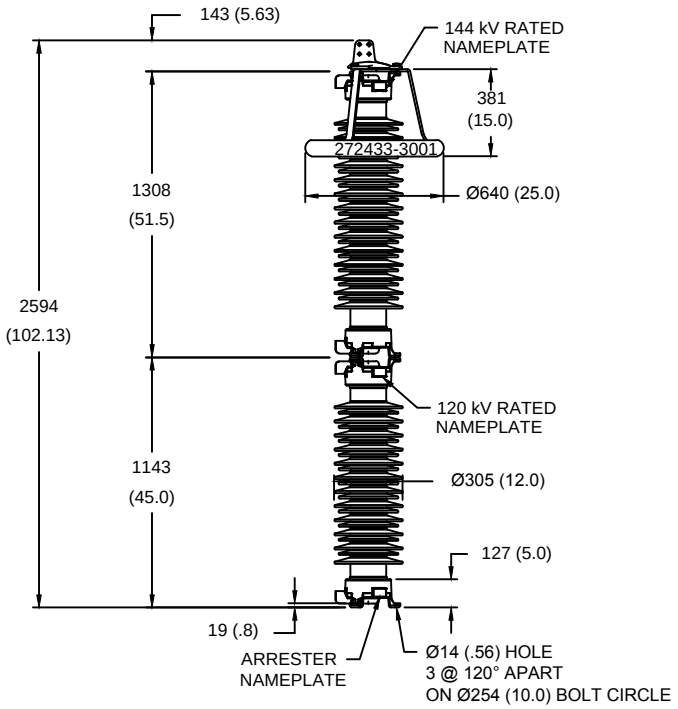

LINE TERMINAL DETAIL

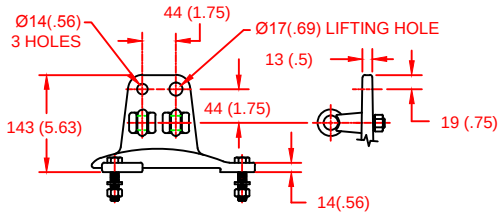

HDG 4-HOLE TERMINAL PAD, PART No. 901704001
TWO HDG TERMINALS, PART No. 2714143001
SUITABLE FOR COPPER OR ALUMINUM CONDUCTOR SIZE
Ø 7 (.25) - Ø 21 (.81)
25 - 240 sq mm
AWG#4 - 500 MCM

GROUND TERMINAL DETAIL

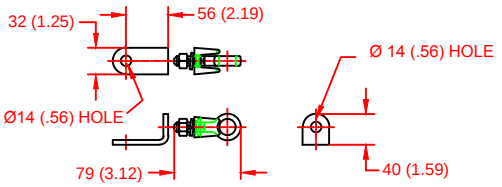

HDG TERMINAL BRACKET, PART No. 896064001
ONE HDG TERMINAL, PART No. 2714143001
SUITABLE FOR COPPER OR ALUMINUM CONDUCTOR SIZE
Ø 7 (.25) - Ø 21 (.81)
25 - 240 sq mm
AWG#4 - 500 MCM

Ø = DIAMETER
HDG = HOT DIP GALVANIZED

CHARACTERISTICS	
RATED VOLTAGE, Ur	264 kVrms
MCOV, Uc	211.2 kVrms
MASS	259kg (570lb)
CREEPAGE DISTANCE	7081 (278.8)
LIGHTNING IMP W/S	1112 kV
SWITCHING IMP W/S	1000 kV
POWER FREQ W/S	639 kVrms
TOV 1s	292 kVrms
TOV 10s	273 kVrms
SLL BENDING FORCE	2621 N (589lbf)
SSL BENDING FORCE	6553 N (1473lbf)
COG ABOVE BASE	1283 (50.5)
HOUSING	BROWN PORCELAIN

NOTES:
1. DIMENSIONS IN millimeters(inches) SUBJECT TO ±3% TOLERANCE
2. CLEARANCE AND INSULATION W/S VOLTAGE APPLY AT SEA LEVEL
3. ARRESTER SUITABLE FOR OPERATION AT ALTITUDES UP TO 2400m (7900ft)

RECOMMENDED CLEARANCE (TO METAL PARTS)	
PHASE TO GROUND	1235 (48.6)
PHASE TO PHASE	1410 (55.5)

RESIDUAL VOLTAGE (kV) FOR INDICATED IMPULSE TYPES AND CURRENT MAGNITUDES						
STEEP CURRENT IMPULSE	SWITCHING IMPULSE		8/20 LIGHTNING IMPULSE			
20 kA	0.5 kA	2 kA	5 kA	10 kA	20 kA	40 kA
797	515	547	591	620	664	731

IEC CLASS 4
SURGE ARRESTER

Program Revision
2018.12.3.03.25.15

REV DATE
12/03/15

CONFIDENTIAL: THIS DRAWING AND ITS CONTENTS ARE CONFIDENTIAL AND THE EXCLUSIVE PROPERTY OF HUBBELL POWER SYSTEMS. NO PUBLICATION, DISTRIBUTION OR COPIES MAY BE MADE WITHOUT THE WRITTEN CONSENT OF HUBBELL POWER SYSTEMS. HUBBELL POWER SYSTEMS UNPUBLISHED ALL RIGHTS RESERVED UNDER THE COPYRIGHT LAWS.

TITLE
MH4 ARRESTER
264 KV RATED VOLTAGE

SIZE	DWG NO.	CAT / PART / ASSY NO.	REV
S	19831489	MH4300BM264AA	2

DO NOT SCALE THIS DRAWING	DRN BY NON	DATE 03/22/11	SHEET 1 OF 1

HUBBELL® POWER SYSTEMS

1:32