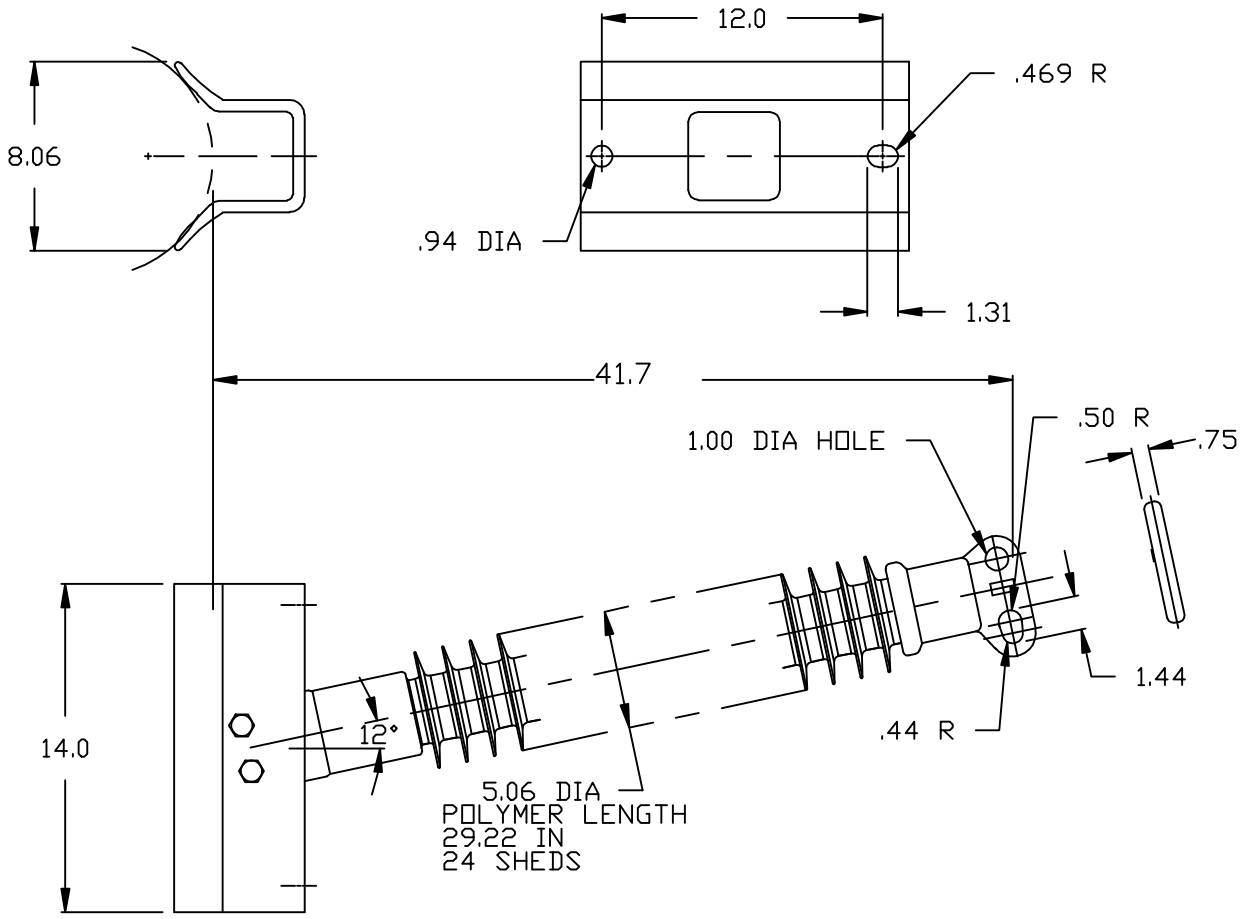

FLOOD WASHABLE
SILICONE RUBBER HOUSING

STRIKE DISTANCE	29 IN
LEAKAGE DISTANCE	76 IN
SCL	4650 LB (20.7 kN)
RCL	2325 LB (10.3 kN)
DRY 60 HZ FLASHOVER	305 kV
WET 60 HZ FLASHOVER	275 kV
WET 60 HZ WITHSTAND	230 kV
IMPULSE CRITICAL POSITIVE	465 kV
IMPULSE WITHSTAND POSITIVE	440 kV
IMPULSE CRITICAL NEGATIVE	580 kV
IMPULSE WITHSTAND NEGATIVE	550 kV
WEIGHT	49 LB

ELECTRICAL CHARACTERISTICS IN
ACCORDANCE WITH ANSI C29.1-1988

Program Revision

REV DATE 03/23/18

CONFIDENTIAL: THIS DRAWING AND ITS CONTENTS ARE CONFIDENTIAL AND THE EXCLUSIVE PROPERTY OF HUBBELL POWER SYSTEMS. NO PUBLICATION, DISTRIBUTION OR COPIES MAY BE MADE WITHOUT THE WRITTEN CONSENT OF HUBBELL POWER SYSTEMS. HUBBELL POWER SYSTEMS UNPUBLISHED ALL RIGHTS RESERVED UNDER THE COPYRIGHT LAWS.

HUBBELL® POWER SYSTEMS

TITLE QUADRI*SIL LINE
POST SERIES 250

SIZE	DWG NO.	CAT / PART / ASSY NO.	REV
S	ER_250-QP	P250029S0020	11

DO NOT SCALE THIS DRAWING	DRN BY NON	DATE 08/27/07	SHEET 1 OF 1

1:8