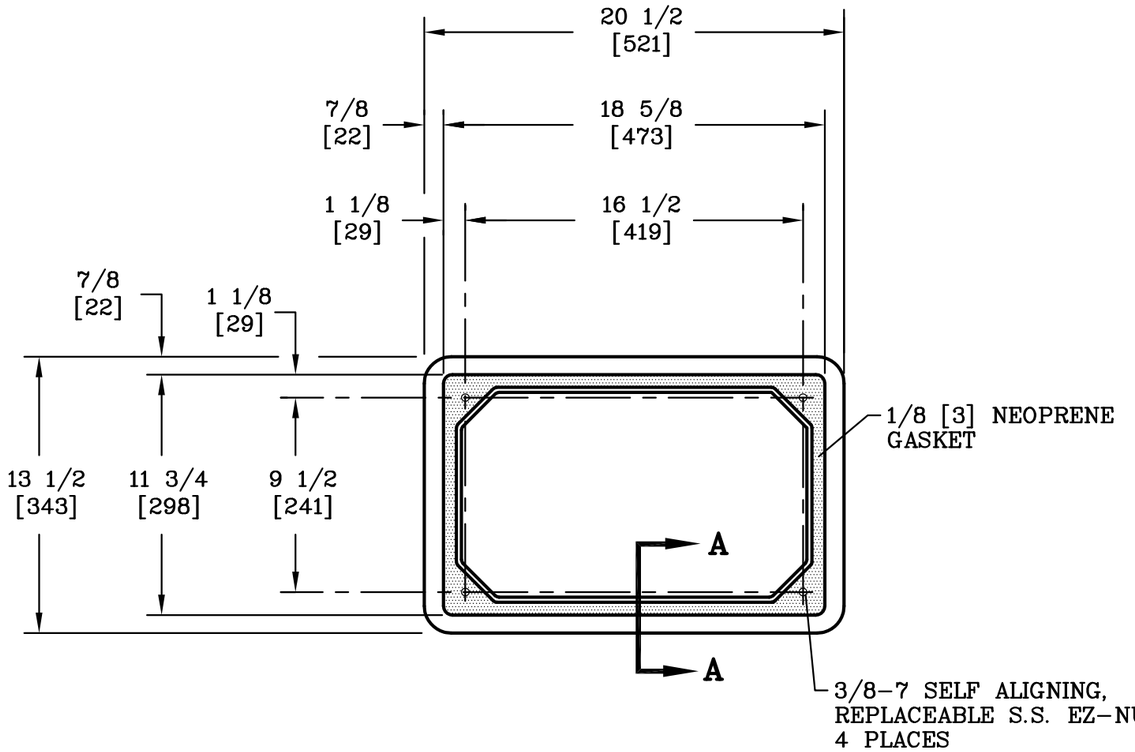

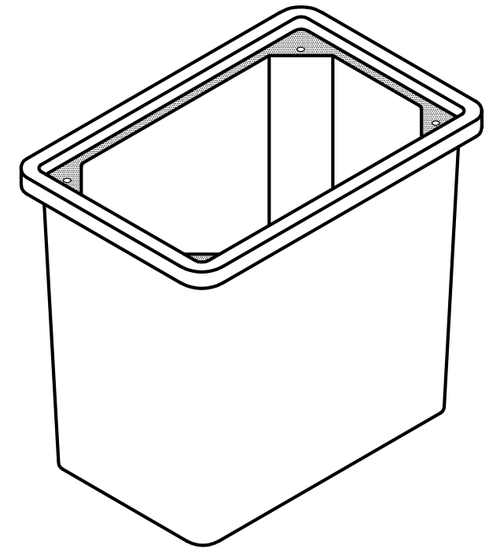

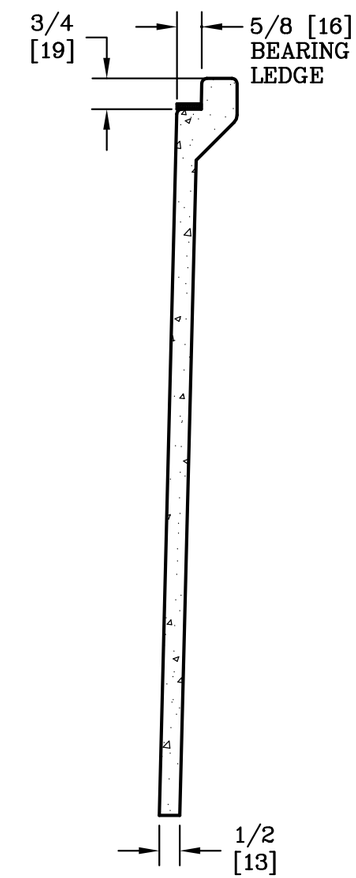

SECTION A-A

SCALE 3"=1'

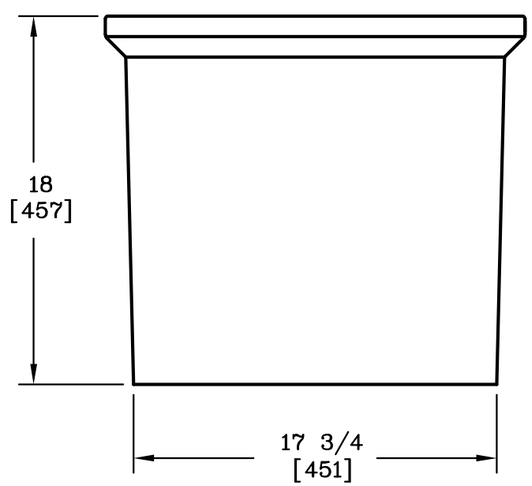

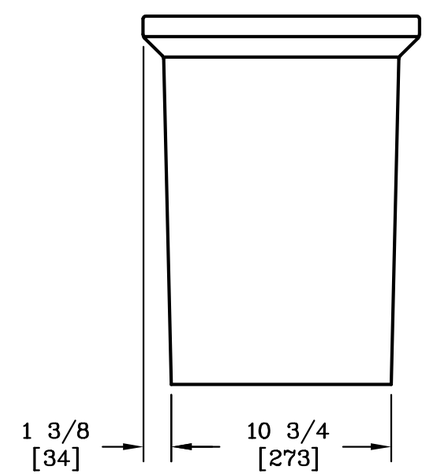

NOTE:

1. DIMENSIONS IN BRACKETS ARE IN MILLIMETERS UNLESS OTHERWISE NOTED.

UL LISTED

DIMENSIONS ARE IN INCHES OR MILLIMETERS IN BRACKETS UNLESS OTHERWISE NOTED.

	BY	DATE	WEIGHT		
DRN	JJP	6/11/04	55# 25kg	HUBBELL® 3621 INDUSTRIAL PARK DR LENOIR CITY, TN 37771 800-346-3062 www.quazite.com	LOC S
CHK	KPC	7/1/04	SCALE 1 1/2"=1'	DRAWING DESCRIPTION	REV
ENG				QUAZITE® BOX	C
APR	MEF	7/13/04	SIZE B		3/12
APR					
PROJECT NUMBER 04573				SHEET 1 OF 1	DRAWING NUMBER PC1118BG18