HUBBELL POWER SYSTEMS

PCORE ELECTRIC

| | | | |
|---|---|---|---|
| **kV CLASS** 345 kV | **BIL** 1175 kV | **Uy** 220 kV | |
| **CURRENT RATING** 800 AMP DRAW LEAD CONNECTION<br>1200 AMP BOTTOM CONN. TRANSFORMER<br>1600 AMP BOTTOM CONN. OIL CIRCUIT BREAKER | | | |
| **MIN. CREEP** 345.00 [8763.0] | **MIN. STRIKE** 115.00 [2921.0] | | |
| **CREEP/Uy** 1.57 [39.8] | **STD.** IEEE C57.19.00/01 | | |
| PCB CONTENT OF OIL IS LESS THAN 1 ppm | | | |

| | |
|---|---|
| **DATE** 3-20-00 | **REV. DATE** 9-18-08 |
| **MAXIMUM ALTITUDE** | 10000 ft [3000 m] |
| **NET WEIGHT** | 1250 lb [567 kg] |
| **ANGLE OF INCLINATION FROM THE VERTICAL** | 0° TO 60° |

| DWG. | CATALOG NUMBER | GLAZE COLOR |
|---|---|---|
| SD | POC1175B0800S | BROWN |
| SD | POC1175G0800S | LT. GRAY |

**TITLE**

TRANSFORMER – BREAKER INTERCHANGEABLE

SILVER PLATED BRASS TOP TERMINAL

NOTE: ACTUAL DRAW-LEAD CURRENT RATING IS DETERMINED BY CABLE SIZE

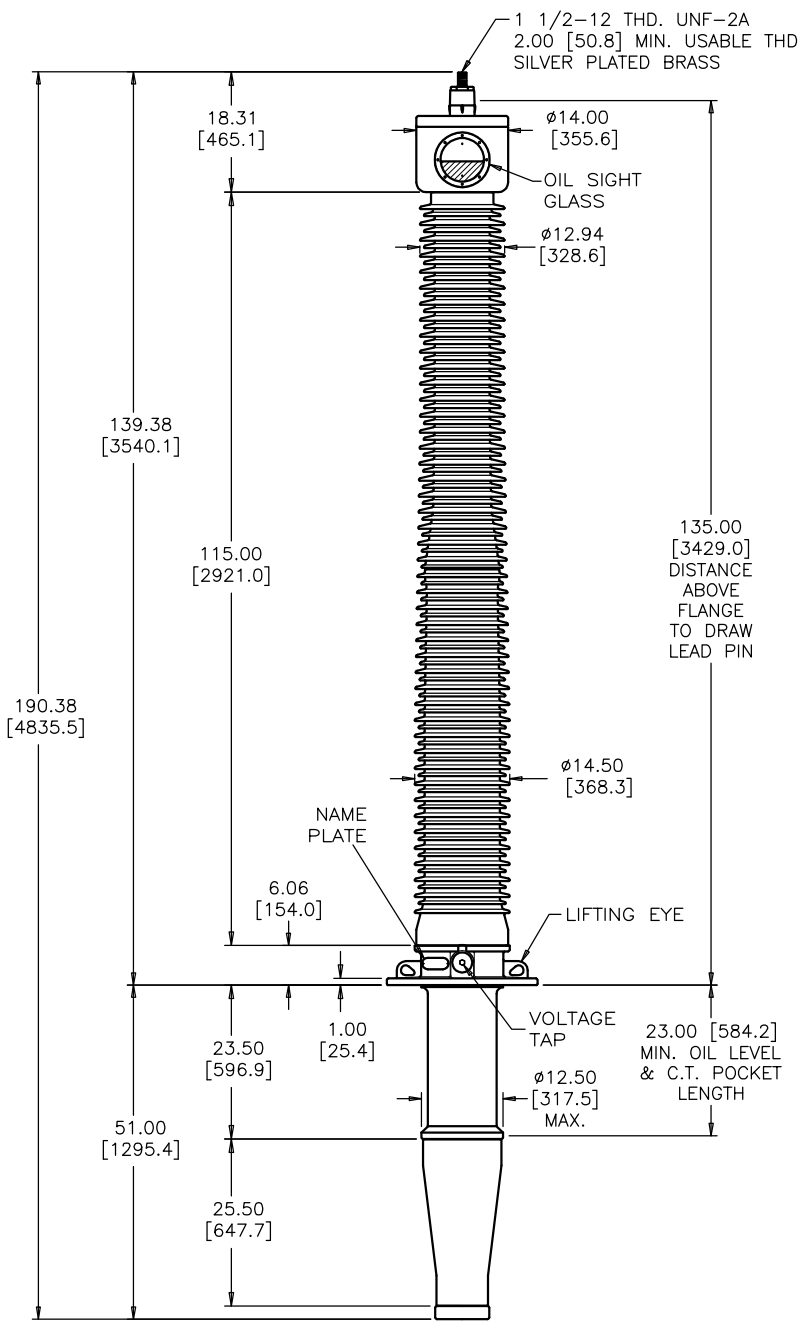


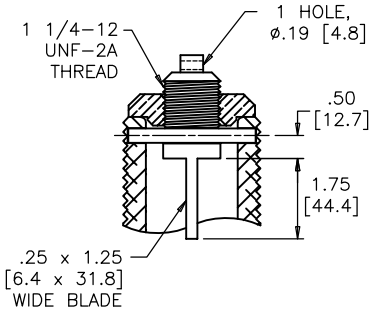


**DRAW LEAD ASSEMBLY**

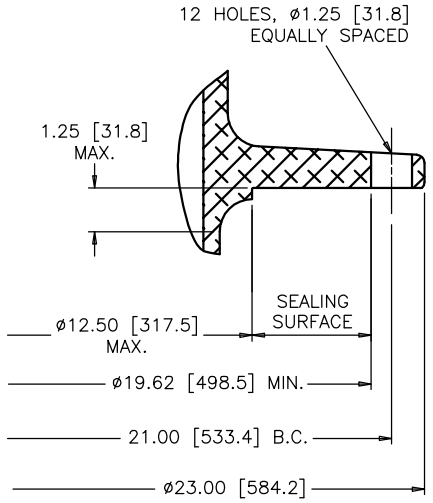


**MOUNTING FLANGE**

ALIGNMENT BETWEEN HOLES IN BOTTOM TERMINAL & IN FLANGE COINCIDE WITHIN ±2°

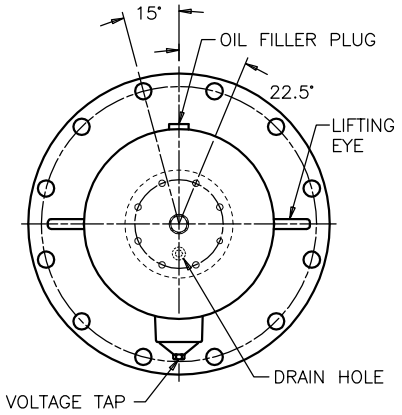


**ALIGNMENT OF FLANGE AND BOTTOM TERMINAL TOP VIEW**

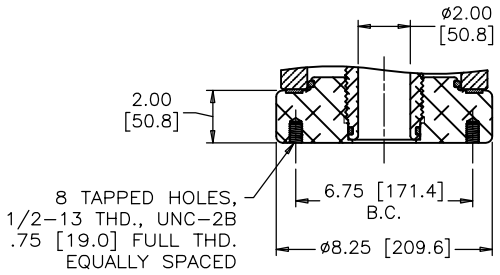


**BOTTOM END CAP**

DIMENSIONS IN INCHES [MILLIMETERS]

**REVISION** REMOVED °C, TEMPERATURE GOVERNED BY IEEE STANDARD

**SCALE** 1/20

NOTE TO PURCHASER:
ALL SALES OF PCORE PRODUCTS ARE SUBJECT TO OUR STANDARD TERMS AND CONDITIONS AND THE LIMITED WARRANTIES THEREUNDER