ITEM	DESCRIPTION	QTY
1)	BASE HOUSING	1
2)	COVER	1
3)	FLAT HEAD SCREWS	4
4)	PHILLIPS HEAD SCREWS	4
5)	COVER LABEL	1
6)	BLANK LABELS	1
7)	CABLE TIE	1
8)	INSTRUCTION SHEET	1

CATALOG NO.	DESCRIPTION
OFPPL	OFFICE WHITE MULTIMEDIA HOUSING
OFPBST2	OFP BRACKET W/2 SM/MM ST COUPLERS (NOT SHOWN)
OFPBB10	10-PACK BLANKS FOR BOTTOM OPENINGS (NOT SHOWN)
FASCMPB6	6-PACK SM/MM DUPLEX SC ADAPTERS, BLUE (NOT SHOWN)

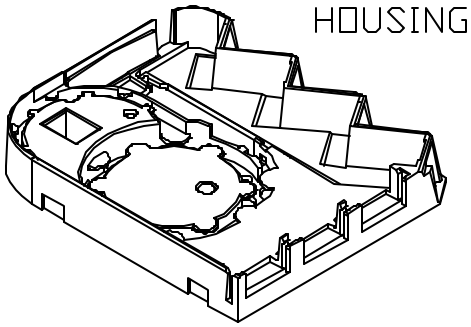

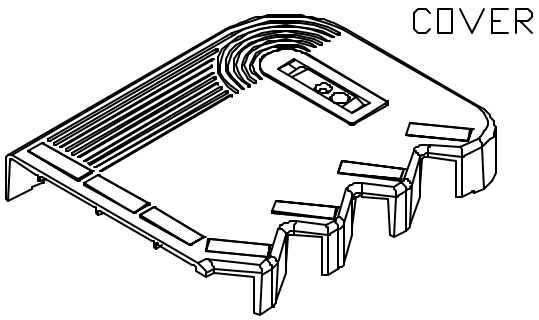

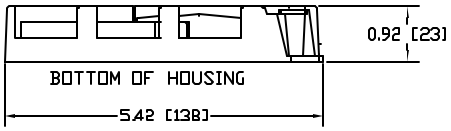

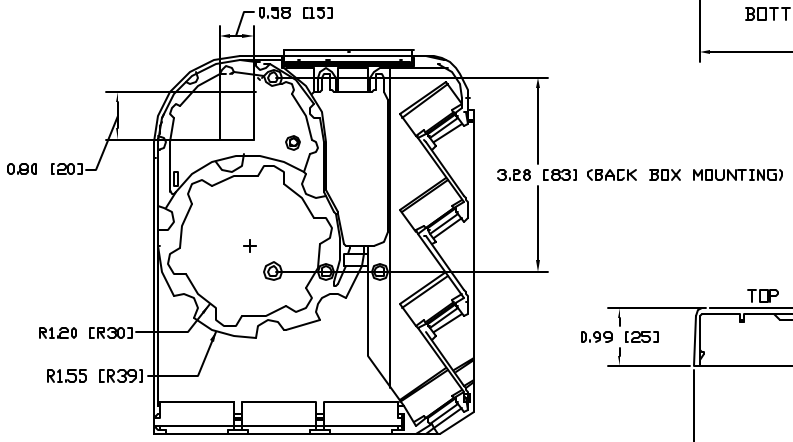

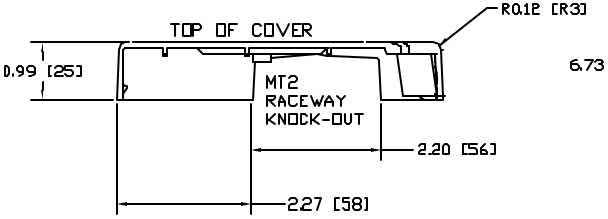

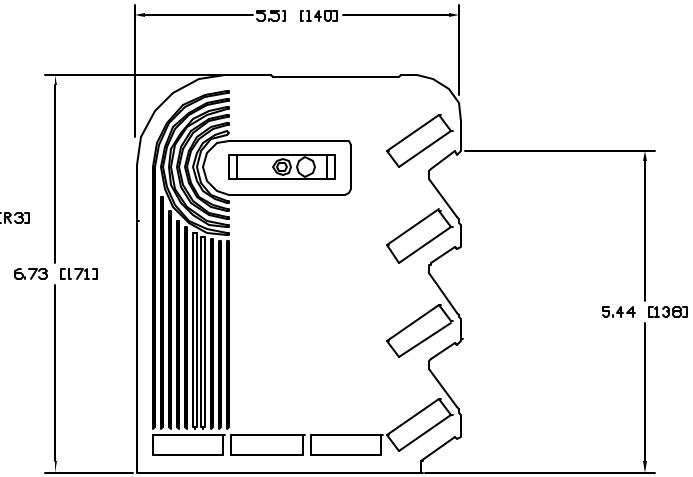

NOTES:
1. OFPPL: OFFICE WHITE HOUSING
2. WALLPLATE ARE UL(#E129878) AND CSA (#LR80837) LISTED.
3. WALLPLATES ARE MADE OF HIGH IMPACT, 94 V-0 RATED THEROMPLASTIC.
4. FIBER STORAGE AREAS MAINTAIN MINIMUM BEND RADIUS.
5. ST &SC ADAPTER PLATES SOLD SEPARATELY

REV.	ECN	DATE	DESCRIPTION	CHG BY	APPD BY
A	3473	5/10/99	INITIAL RELEASE	RAR	

Created in V-14 AUTOCAD

DIMENSIONS AND TOLERANCE PER ANSI Y14.5M-1982
UNLESS OTHERWISE SPECIFIED, DIMENSIONS ARE IN INCHES (MM).
TOLERANCES:
.XX = ±.10 (.25)
.XXX = ±.005 (.127)
.XXXX = ±.0030 (.0762)
ANGLE TOL ±4°

IN ACCEPTING OUR DRAWINGS, BLUEPRINTS, OR SUPPORTING DOCUMENTATION FOR QUOTATION OR OTHER PURPOSES, YOU AGREE NOT TO DISCLOSE TO OTHERS THE IDEAS, INFORMATION, OR DESIGNS SHOWN HEREIN, AND THAT YOU WILL MAKE NO USE OF SAME WITHOUT PERMISSION

PROJECT REFERENCE:
MATERIAL:
DRAWN BY: RREGO
CHECKED BY:
APPROVED BY:

Hubbell Premise Wiring
HUBBELL INCORPORATED (Delaware)
14 Lordship Hill Road, Stonington, Connecticut 06378

TITLE: OFPPL MULTIMEDIA WALLPLATE

SIZE	DRAWING NO.	REV.
D	C778572, C778573	A

SCALE: NONE SHEET 1 OF 1