CATALOG NUMBER	DESCRIPTION
ICKPM	POWER STRIP MOUNTING BRACKETS FOR IFRAME

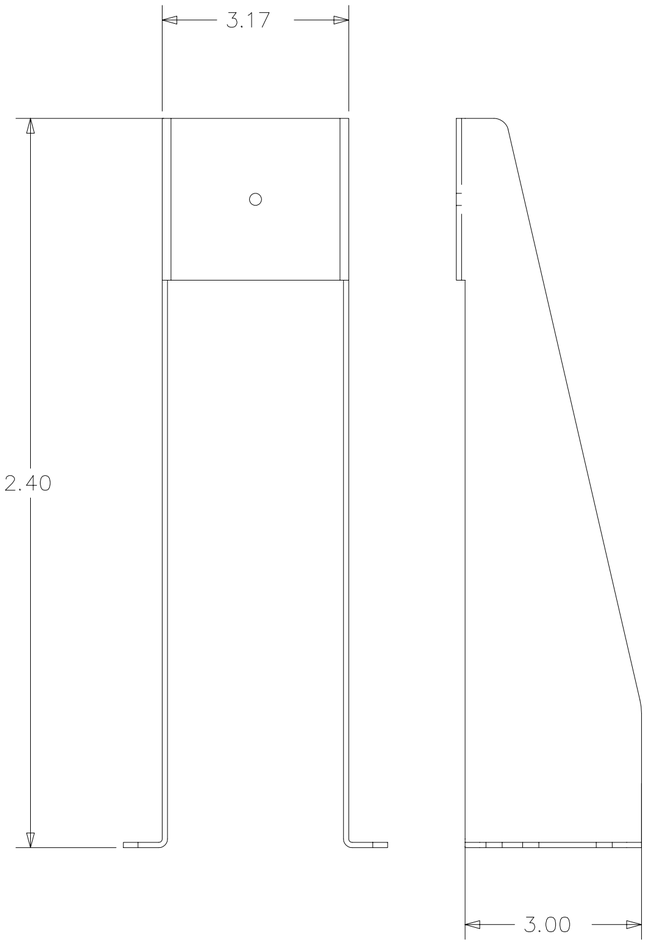

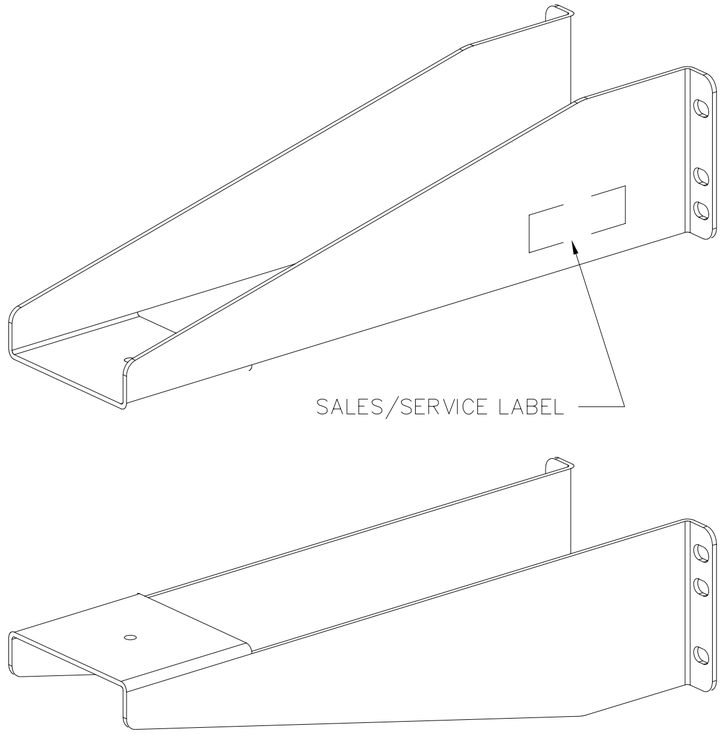

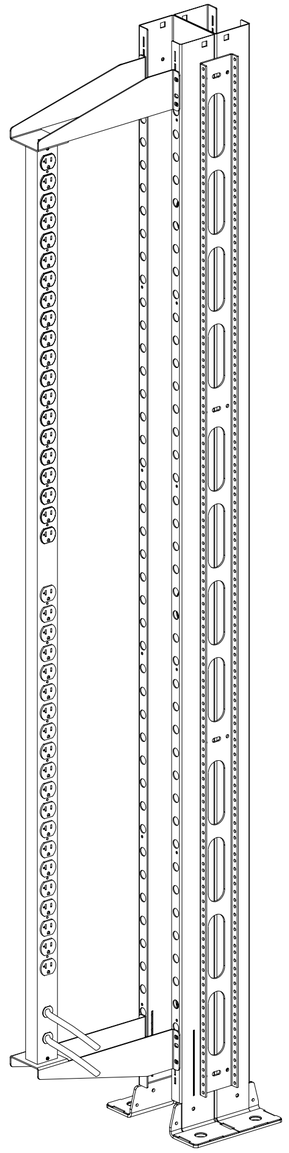

SHOWN FOR REFERENCE ONLY

NOTES:

1. SURFACE FINISH: BLACK POWDER COAT
2. MAY BE USED TO INSTALL A 66" LONG STRIP (PR20Z120) OR A 70" LONG STRIP (PR40Z120).
3. KIT CONTAINS:
   (2) MOUNTING BRACKET
   (8) #12–24 X 5/8 THREAD FORMING SCREW
   (8) NYLON WASHER
   (1) INSTRUCTION SHEET
4. SPEICIFICATIONS SUBJECT TO CHANGE WITHOUT NOTICE.

REV.	ECN	DATE	DESCRIPTION	CHG BY	APPD BY
A	5521	05/25/06	INITIAL RELEASE	MMA	

Created on AUTOCAD

DIMENSIONING AND TOLERANCE PER ANSI Y14.5M–1982
UNLESS OTHERWISE SPECIFIED, DIMENSIONS ARE IN INCHES (MM).
TOLERANCES
.X = ±.03 (.8)
.XX = ±.02 (.4)
.XXX = ±.010 (.25)
ANGLE TOL ±1°

IN ACCEPTING OUR DRAWINGS, BLUEPRINTS, OR SUPPORTING DOCUMENTATION FOR QUOTATION OR OTHER PURPOSES, YOU AGREE NOT TO DISCLOSE TO OTHERS THE IDEAS, INFORMATION, OR DESIGNS SHOWN HEREIN, AND THAT YOU WILL MAKE NO USE OF SAME WITHOUT PERMISSION

PROJECT REFERENCE:

MATERIAL: 14 Ga. C.R.S.

DRAWN BY: M. ABBY 05/23/06

CHECKED BY:

APPROVED BY:

Hubbell Premise Wiring
HUBBELL INCORPORATED (Delaware)
14 Lord's Hill Road, Stonington, Connecticut 06378

TITLE: KIT, POWER STRIP MOUNTING BRACKETS FOR IFRAME

SIZE	DRAWING NO.	REV.
C	HWS12164C	A

SCALE: | SHEET 1 OF 1