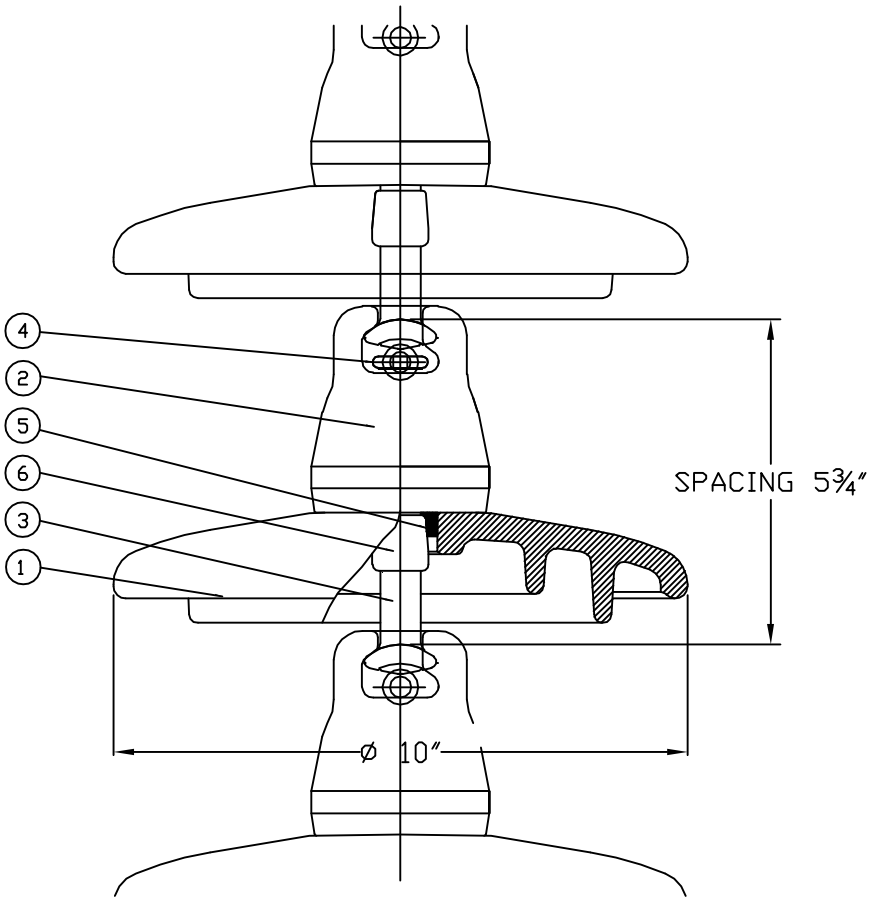

DIMENSIONS

- DIAMETER OF SHELL — 10 in
- SPACING — 5-3/4 in
- CREEPAGE DISTANCE — 12-5/8 in
- STANDARD COUPLING (ANSI C29.2B) — J
- APPROX. NET WEIGHT — 9.0 lbs

ELECTRICAL PERFORMANCE

- FLASHOVER VOLTAGE IND. FREQ.
  - DRY — 80 kV
  - WET — 50 kV
- CRITICAL IMPULSE FLASHOVER VOLTAGE
  - POSITIVE — 125 kV
  - NEGATIVE — 130 kV
- PUNCTURE VOLTAGE IN OIL — 130 kV
- R.I.V. TEST VOLTAGE rms TO GROUND — 10 kV
- MAXIMUM R.I.V. AT 1000kHz — 50 µV

MECHANICAL PERFORMANCE

- COMBINED MECHANICAL AND ELECTRICAL STRENGTH — 30,000 lbs
- MECHANICAL IMPACT STRENGTH — 400 in-lbs
- TENSION PROOF — 15,000 lbs

TESTS

- IN ACCORDANCE WITH ANSI C29.2.B

COMPONENT PARTS

1.- DIELECTRIC SHELL: TOUGHENED GLASS G-120 (IEC 60672)
2.- CAP: MALLEABLE CAST IRON / EN1562
OR SPHEROIDAL GRAPHITE CAST IRON / EN 1563
HOT DIP GALVANIZED
3.- PIN: HOT DIP GALVANIZED FORGED STEEL
(EN 10083-1 or EN 10263-1 & 4)
4.- SPLIT-PIN: AUSTENITIC STAINLESS STEEL AISI-304
5.- CEMENT: ALUMINIOUS CEMENT (EN 14647)
6.- SACRIFICIAL SLEEVE: ZINC

NOTES:

1.- GLASS BELL DESIGN AND M&E RATING INDICATED BY YELLOW BAND

REV DATE 05/04/17

CONFIDENTIAL: THIS DRAWING AND ITS CONTENTS ARE CONFIDENTIAL AND THE EXCLUSIVE PROPERTY OF HUBBELL POWER SYSTEMS. NO PUBLICATION, DISTRIBUTION OR COPIES MAY BE MADE WITHOUT THE WRITTEN CONSENT OF HUBBELL POWER SYSTEMS. HUBBELL POWER SYSTEMS UNPUBLISHED ALL RIGHTS RESERVED UNDER THE COPYRIGHT LAWS.

HUBBELL® POWER SYSTEMS

TITLE: GLASS INSULATOR 52-5 H

SIZE	DWG NO.	CAT / PART / ASSY NO.	REV
B	--	PSN14146DC	1

DO NOT SCALE THIS DRAWING | DRN BY RVK | DATE 08/01/16 | SHEET 1 OF 1

148