REVISIONS			
REV.	DATE	DESCRIPTION	BY:
-	01-29-19	INITIAL RELEASE OF DRAWING	RMV

FILE NO.: 130 CUS

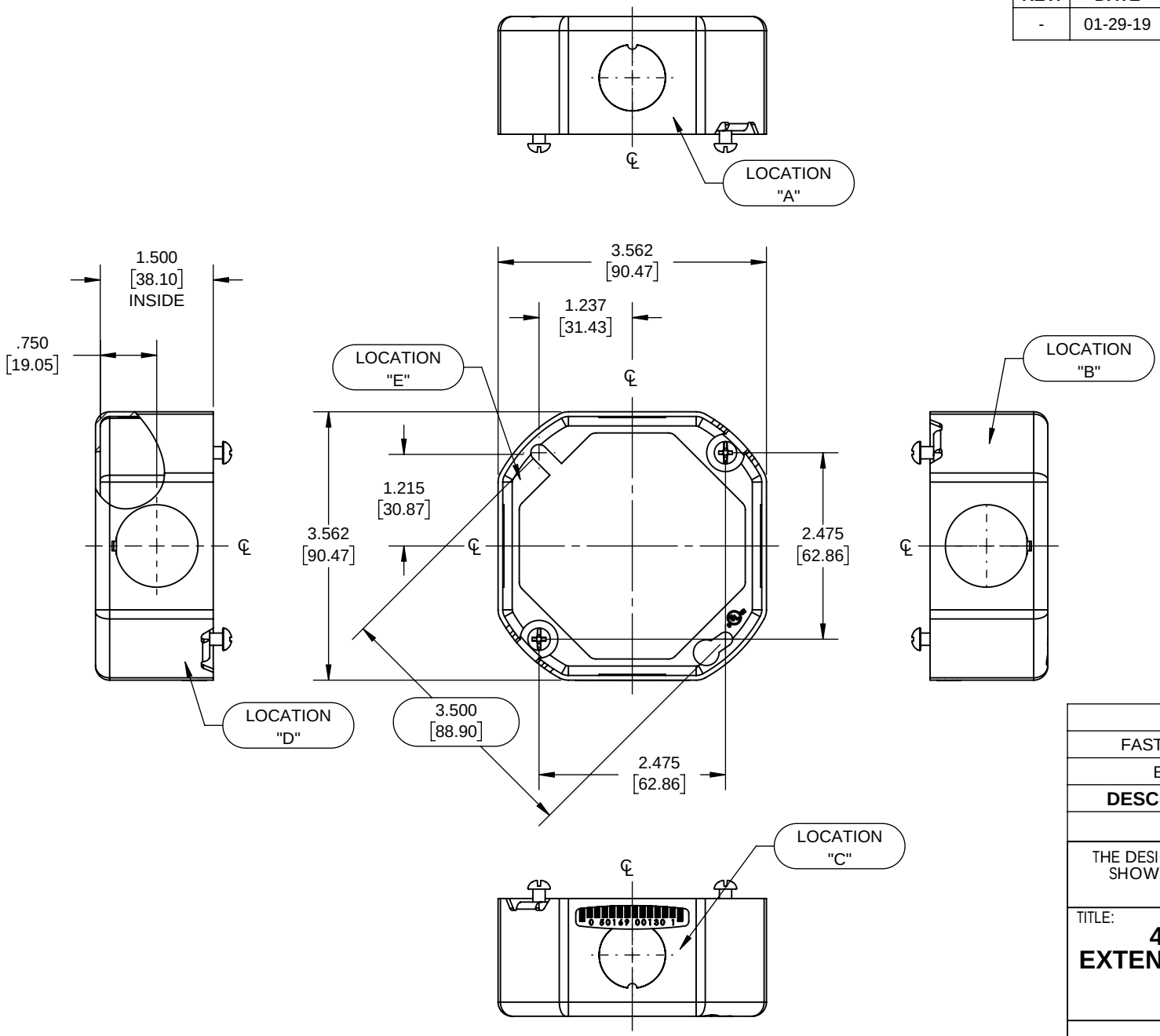

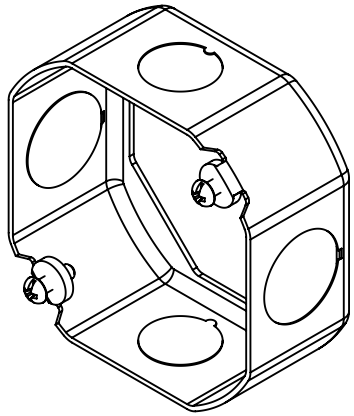

FASTENERS	STEEL	GALVANIZED
BOX	STEEL	GALVANIZED
DESCRIPTION	**MATERIAL**	**FINISH**

LIST OF PARTS

THE DESIGN AND DIMENSIONS OF THE PRODUCT SHOWN ON THIS DRAWING ARE SUBJECT TO CHANGE WITHOUT NOTICE

TITLE:

4" DRAWN OCTAGON EXTENSION RING, 1-1/2" DP., 1/2" KO'S

NOTES:
1. ALL DIMENSIONS ARE IN INCHES AND [MILLIMETERS]
2. BOX VOLUME: 15.5 INi [254.0 CMi]
3. cULus LISTED

KNOCKOUTS		
TRADE SIZE	LOCATION	QTY.
1/2" KO	A, C	1
3/4" KO	B, D	1

TOLERANCE UNLESS OTHERWISE SPECIFIED

.XX DECIMAL ± .015
.XXX DECIMAL ± .005
ANGLE ± 2°

RACO

DRAWN BY:	RMV	SCALE:
APP. BY:	N.S.	
DATE:	01-29-19	1:2

SIZE: A

DIMENSION SHEET FOR CAT. NO. 130

11in*17in