REVISIONS			
REV.	DATE	DESCRIPTION	BY:
-	01-11-19	INITIAL RELEASE	RMV

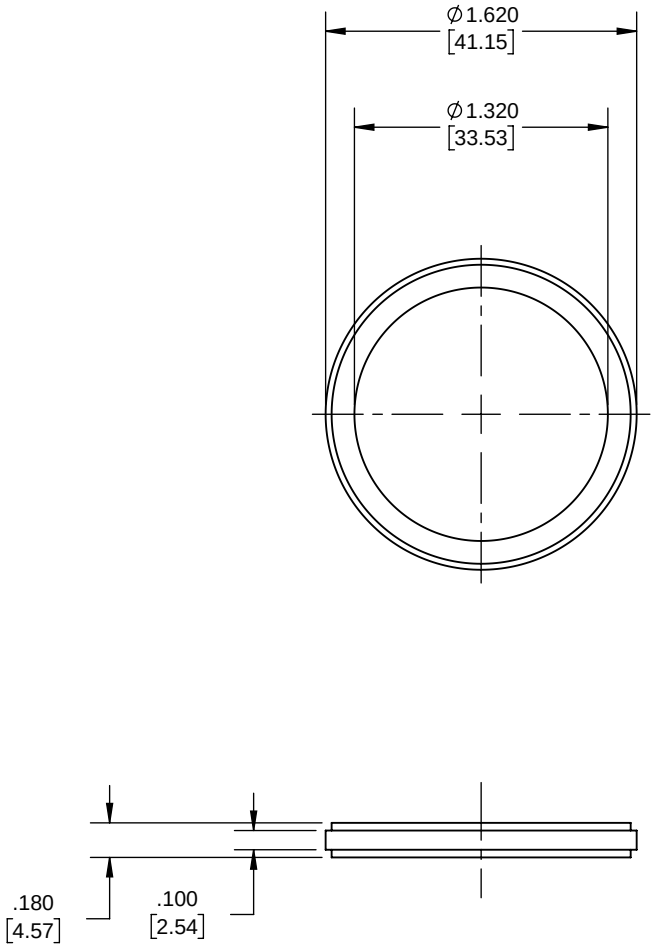

GASKET	NEOPRENE	-
RING	STEEL	GALVANIZED
DESCRIPTION	**MATERIAL**	**FINISH**

LIST OF PARTS

THE DESIGN AND DIMENSIONS OF THE PRODUCT SHOWN ON THIS DRAWING ARE SUBJECT TO CHANGE WITHOUT NOTICE

TITLE:

SEALING WASHER, 1"

TOLERANCE UNLESS OTHERWISE SPECIFIED

.XX DECIMAL ± .015
.XXX DECIMAL ± .005
ANGLE ± 2°

RACO

DRAWN BY:	RMV	SCALE:
APP. BY:	N.S.	
DATE:	01-11-19	1:1

SIZE: A

FILE NO.: 2454 CUS

DIMENSION SHEET FOR CAT. NO. 2454

8.5in*11in

NOTES:

1. ALL DIMENSIONS ARE IN INCHES AND [MILLIMETERS]
2. cULus LISTED