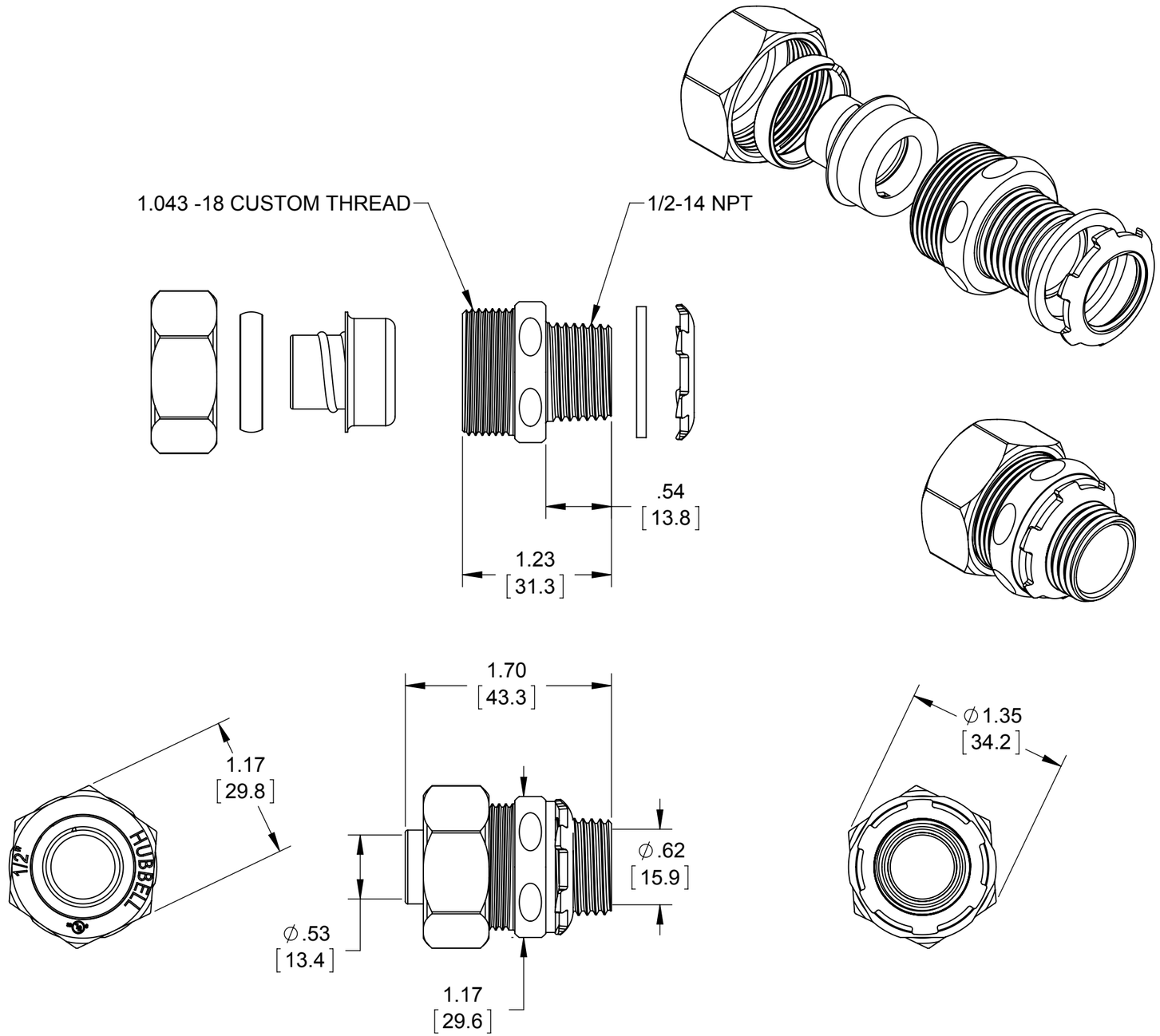

NOTES:
1. ALL DIMENSIONS ARE IN INCHES AND [MILLIMETERS]
2. cULus LISTED

LIST OF PARTS

DESCRIPTION	MATERIAL	FINISH
STRAIGHT BODY	STEEL	GALVANIZED
FERRULE	STEEL	GALVANIZED
GLAND RING	NYLON	YELLOW
COMPRESSION NUT	STEEL	GALVANIZED
WASHER	NYLON	YELLOW
LOCK NUT	STEEL	GALVANIZED

FILE NO. : 3402 CUS

SYM.	REVISION DESCRIPTION	APP	DATE
	INITIAL RELEASE	J.R.	03/17/2015

THE DESIGN AND DIMENSIONS OF THE PRODUCT SHOWN ON THIS DRAWING ARE SUBJECT TO CHANGE WITHOUT NOTICE

DIMENSION SHEET FOR CAT. NO. **3402**

TITLE:

3402 1/2" LIQUIDTIGHT STRAIGHT CONNECTOR

TOLERANCE UNLESS OTHERWISE SPECIFIED
.XX DECIMAL ±.015
.XXX DECIMAL ±.005
ANGLE ±2°

RACO
South Bend, Indiana

DRAWN BY:	J.R.	SCALE: 1:1
APP. BY:	M.C.	
DATE:	03/17/2015	

SIZE: **B**