ITEM NO.	Description	Material	Finish	QTY.
1	2" TRADE SIZE RIGID COMPRESSION CONNECTOR BODY	C1008 COLD ROLLED STEEL	.0005 ZINC MIN.	1
2	2.625-14 UNS 2B COMPRESSION NUT	C1008 COLD ROLLED STEEL	.0005 ZINC MIN.	1
3	INSULATION BUSHING	NYLON 6	YELLOW	1
4	2-11½ NPT 2B LOCK NUT	C1008 HOT ROLLED STEEL	.0005 ZINC MIN.	1
5	2" TRADE SIZE GLAND RING	C1008 GALVANIZED STEEL	.0005 ZINC MIN.	1

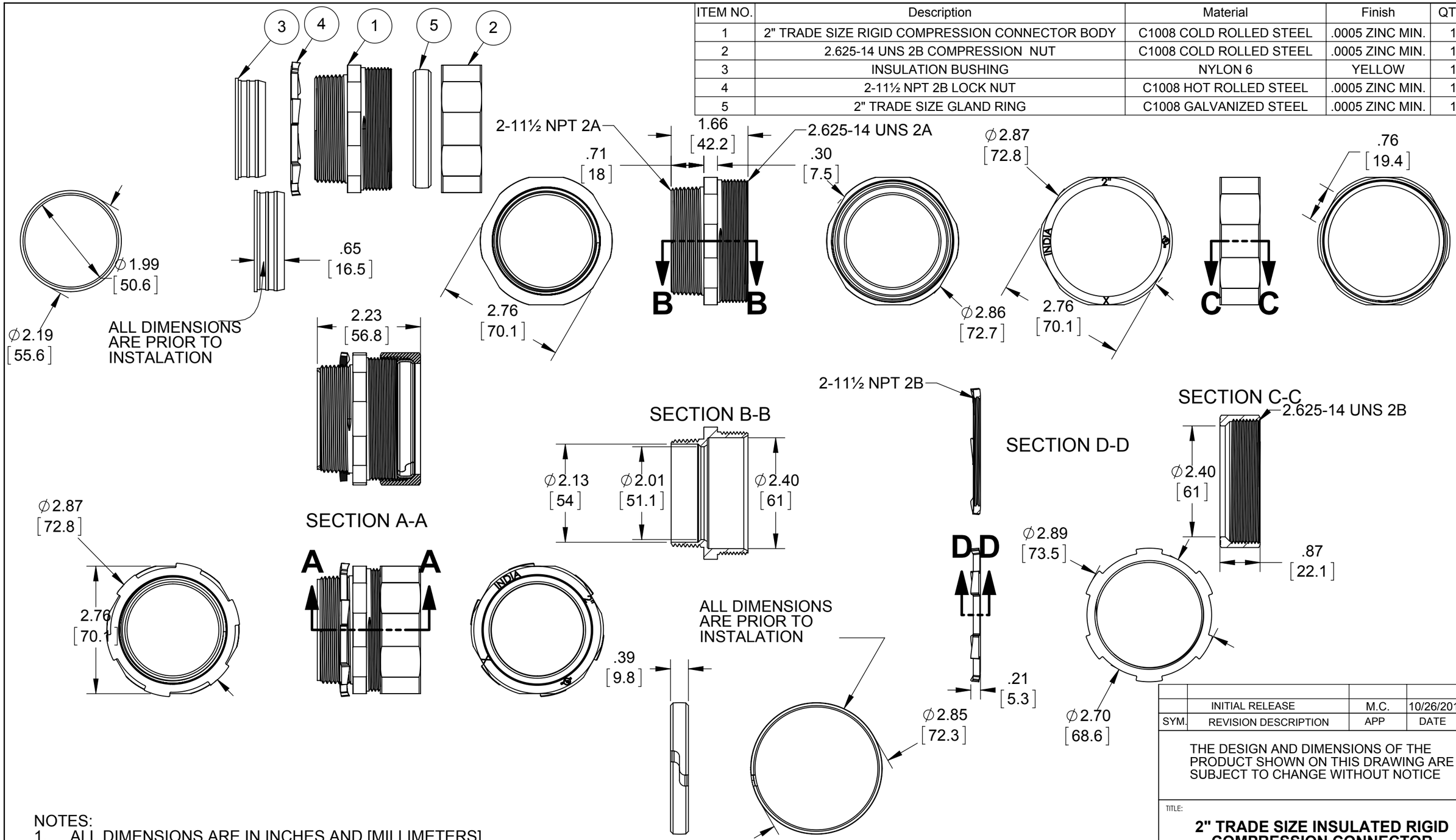

NOTES:
1. ALL DIMENSIONS ARE IN INCHES AND [MILLIMETERS]
2. LOCKNUT SHALL BE HAND-TIGHTENED AND THEN FURTHER TIGHTENED 1/4 TURN WITH A HAMMER AND A FLAT BLADED SCREWDRIVER OR BY AN EQUIVALENT METHOD
3. COMPRESSION NUT IS TO BE TIGHTENED TO 1600 LBF-IN TORQUE
4. CONCRETE TIGHT
5. cULus® LISTED

SYM.	REVISION DESCRIPTION	APP	DATE
	INITIAL RELEASE	M.C.	10/26/2015

THE DESIGN AND DIMENSIONS OF THE PRODUCT SHOWN ON THIS DRAWING ARE SUBJECT TO CHANGE WITHOUT NOTICE

TITLE:

2" TRADE SIZE INSULATED RIGID COMPRESSION CONNECTOR

TOLERANCE UNLESS OTHERWISE SPECIFIED
.XX DECIMAL ±.015
.XXX DECIMAL ±.005
ANGLE ±2°

RACO
South Bend, Indiana

DRAWN BY:	J.RICHARD	SCALE: 1:2
APP. BY:	M.C.	
DATE:	10/26/2015	

SIZE: **B**

DIMENSION SHEET FOR CAT. NO.
3808RAC

FILE NO. :
3808RAC-CUS