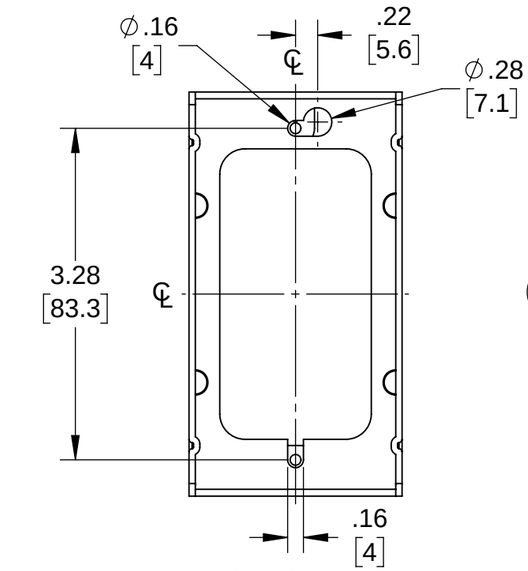

REAR VIEW

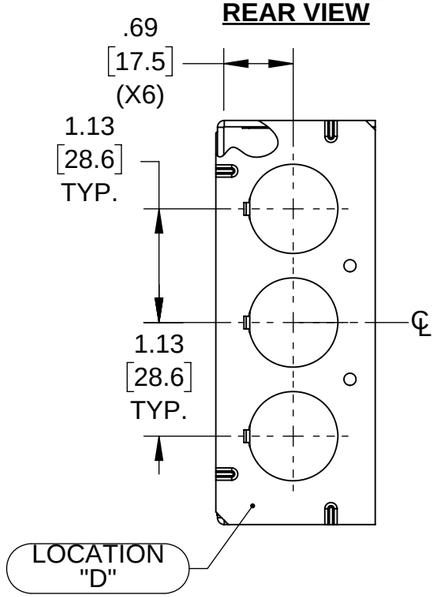

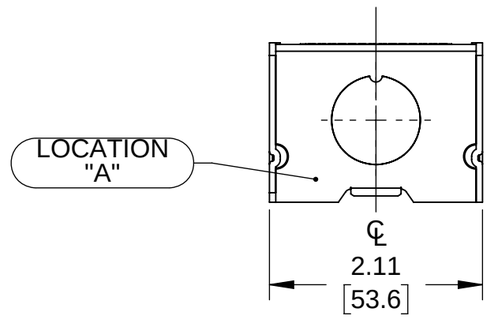

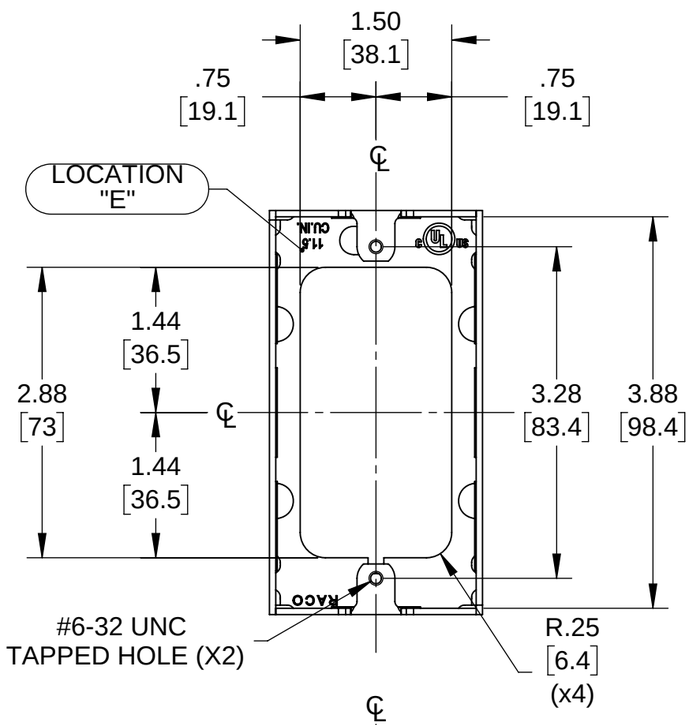

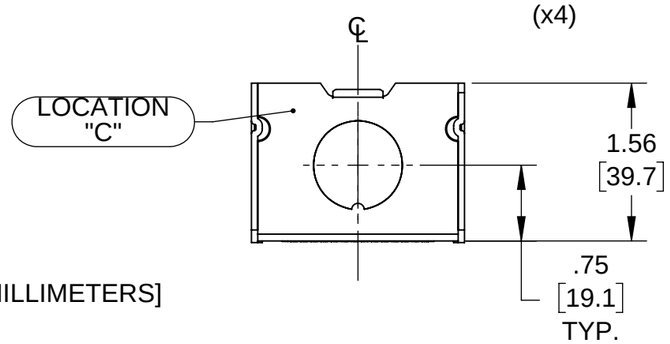

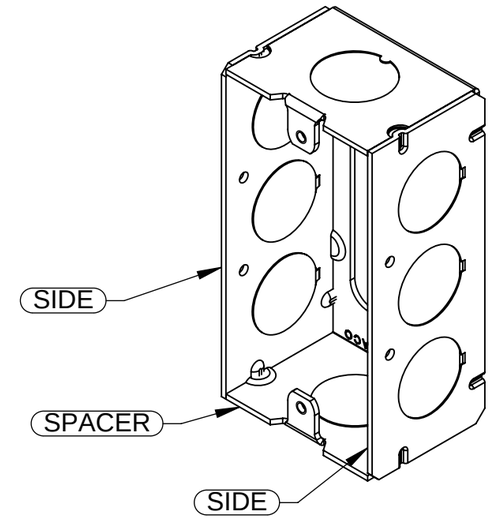

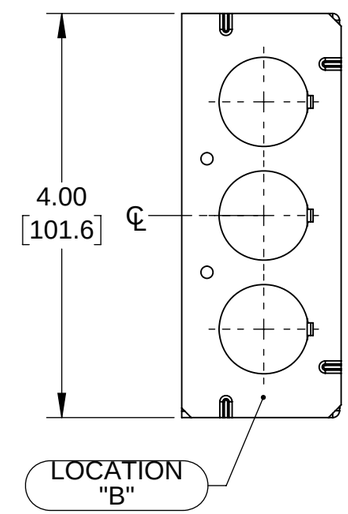

NOTES:
1. ALL DIMENSIONS ARE IN INCHES AND [MILLIMETERS]
2. BOX VOLUME: 11.5 INį [188.5] CMį
3. cULus LISTED

KNOCKOUTS		
TRADE SIZE	LOCATION	QTY.
1/2" KO	A,C	1
1/2" KO	B,D	3

LIST OF PARTS

DESCRIPTION	MATERIAL	FINISH
SPACER	STEEL	GALVANIZED
SIDES	STEEL	GALVANIZED

FILE NO. : 653 CUS

SYM.	REVISION DESCRIPTION	APP	DATE
	INITIAL RELEASE	RMV	01/24/17

THE DESIGN AND DIMENSIONS OF THE PRODUCT SHOWN ON THIS DRAWING ARE SUBJECT TO CHANGE WITHOUT NOTICE

TITLE:

4" X 1.5" DEEP WELDED BOX W/ (8) 1/2" KO'S (UL) & BARCODE LABEL

DIMENSION SHEET FOR CAT. NO. **653**

TOLERANCE UNLESS OTHERWISE SPECIFIED

.XX DECIMAL ±.015
.XXX DECIMAL ±.005
ANGLE ±2°

RACO
South Bend, Indiana

DRAWN BY:	RMV	SCALE:	1:1.5
APP. BY:	N.S.		
DATE:	01/24/17		

SIZE: **B**

11in*17in