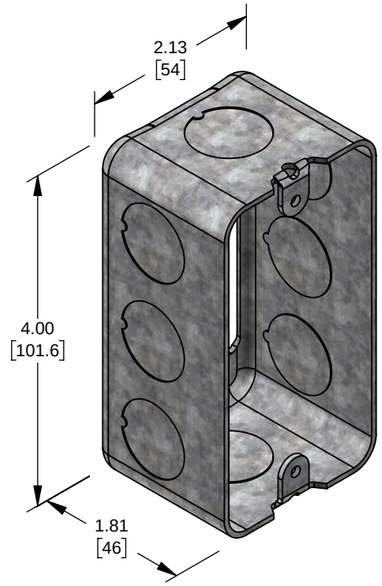

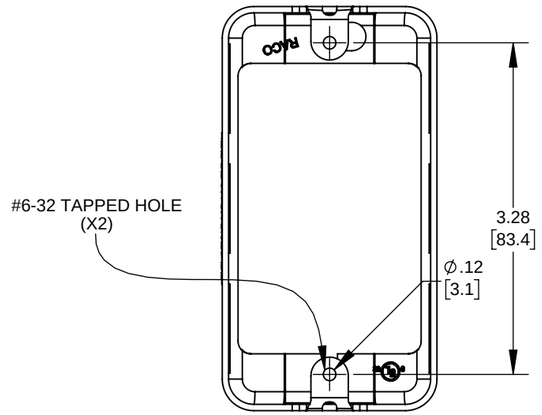

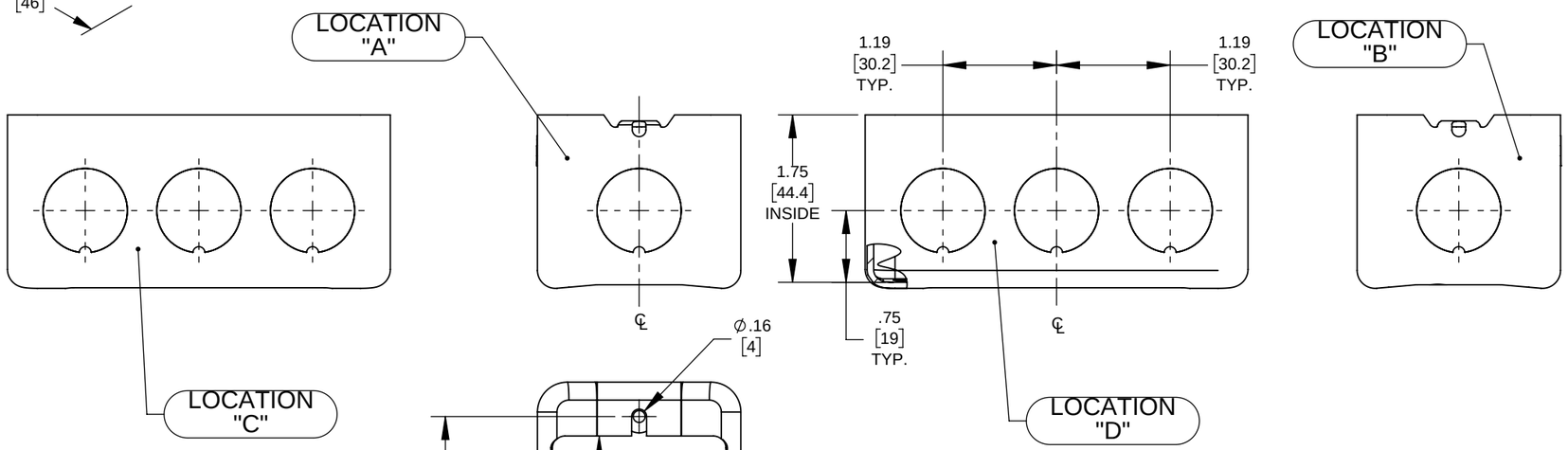

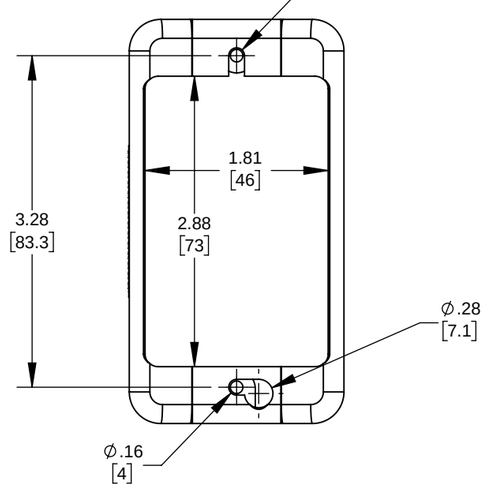

NOTES:
1. ALL DIMENSIONS ARE IN INCHES AND [MILLIMETERS]
2. BOX VOLUME: 13.0 INj [213.0] CMj
3. cULus LISTED

KNOCKOUTS

TRADE SIZE	LOCATION	QTY.
1/2" KO	A,B	1
1/2" KO	C,D	3

LIST OF PARTS

DESCRIPTION	MATERIAL	FINISH
EXTENSION RING	STEEL	GALVANIZED

FILE NO. : 665 CUS

SYM.	REVISION DESCRIPTION	APP	DATE
	INITIAL RELEASE	N.S.	10-19-16

THE DESIGN AND DIMENSIONS OF THE PRODUCT SHOWN ON THIS DRAWING ARE SUBJECT TO CHANGE WITHOUT NOTICE

DIMENSION SHEET FOR CAT. NO. **665**

TITLE:

4" X 2" X 1.875" HANDY BOX EXTENSION RING W/ (8) .5" KO'S (DRAWN)

TOLERANCE UNLESS OTHERWISE SPECIFIED
.XX DECIMAL ±.015
.XXX DECIMAL ±.005
ANGLE ±2°

RACO
South Bend, Indiana

DRAWN BY:	J.R.	SCALE: 2:3
APP. BY:	N.S.	
DATE:	10-19-16	

SIZE: **B**

11in*17in