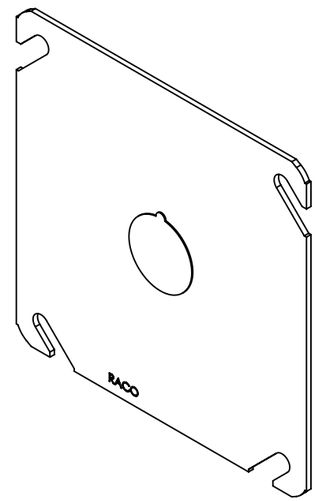

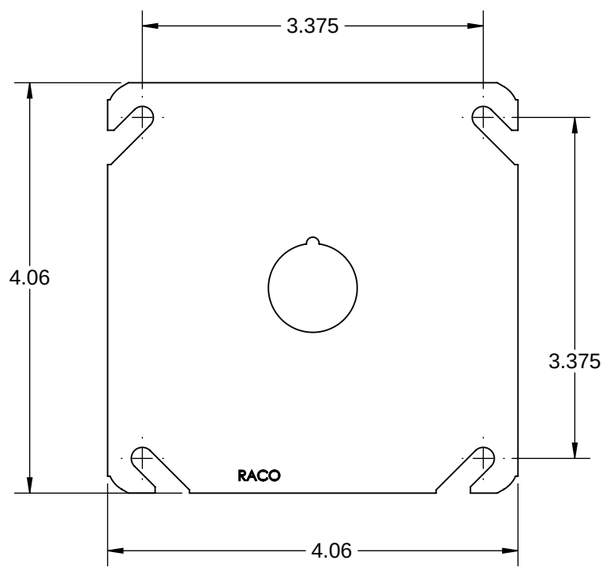

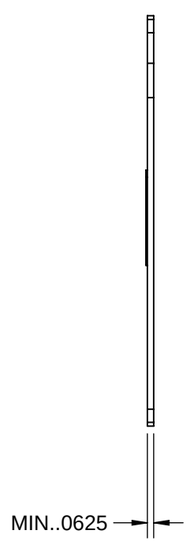

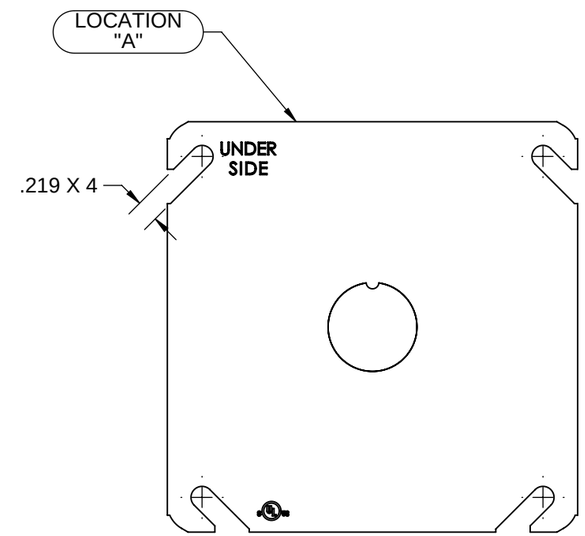

LIST OF PARTS

DESCRIPTION	MATERIAL	FINISH
COVER	STEEL	GALVANIZED

FILE NO. :

753 CUS

753, 8753, 8753X, & 8753-5

DIMENSION SHEET FOR CAT. NO.

SYM.	REVISION DESCRIPTION	APP	DATE
	INITIAL RELEASE	N.S.	11/23/2015

THE DESIGN AND DIMENSIONS OF THE PRODUCT SHOWN ON THIS DRAWING ARE SUBJECT TO CHANGE WITHOUT NOTICE

TITLE:

CAT. # 753 4" SQUARE FLAT COVER W/ KO

NOTES:
1. ALL DIMENSIONS ARE IN INCHES AND [MILLIMETERS]
2. cULus LISTED

KNOCKOUTS

TRADE SIZE	LOCATION	QTY.
1/2" KO	A	1

TOLERANCE UNLESS OTHERWISE SPECIFIED

.XX DECIMAL ±.015
.XXX DECIMAL ±.005
ANGLE ±2°

RACO
South Bend, Indiana

DRAWN BY:	K. PATEL	SCALE: 2:3
APP. BY:	N.S.	
DATE:	11/23/2015	

SIZE: **B**