REVISIONS			
REV.	DATE	DESCRIPTION	BY:
-	02-06-19	INITIAL RELEASE	RMV

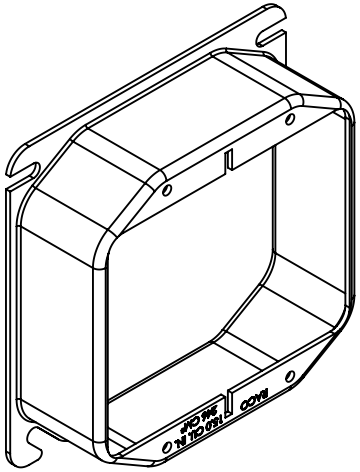

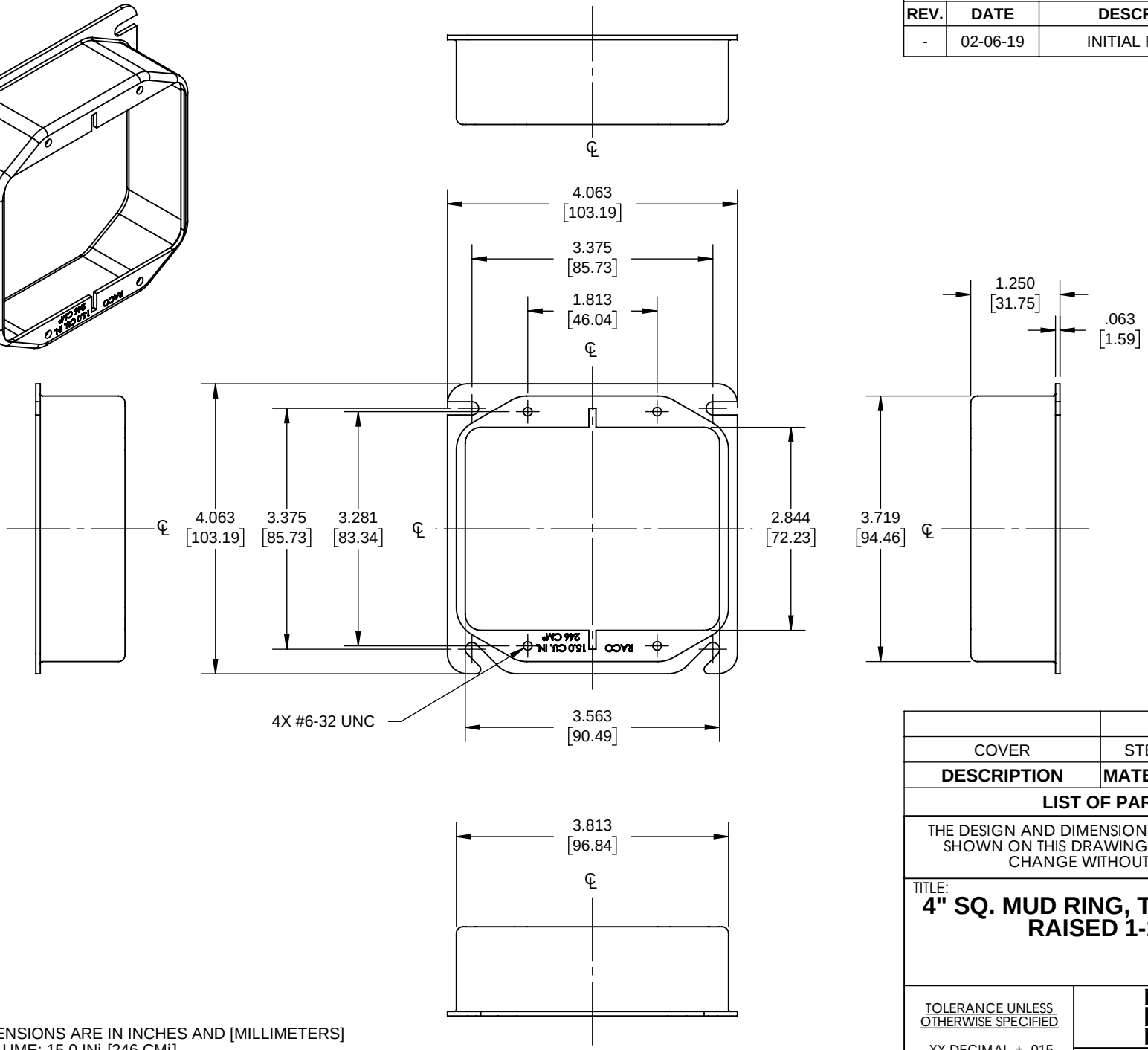

NOTES:

1. ALL DIMENSIONS ARE IN INCHES AND [MILLIMETERS]
2. BOX VOLUME: 15.0 INj [246 CMj]
3. cULus LISTED

COVER	STEEL	GALVANIZED
DESCRIPTION	**MATERIAL**	**FINISH**

LIST OF PARTS

THE DESIGN AND DIMENSIONS OF THE PRODUCT SHOWN ON THIS DRAWING ARE SUBJECT TO CHANGE WITHOUT NOTICE

TITLE:

4" SQ. MUD RING, TWO DEVICE, RAISED 1-1/4"

TOLERANCE UNLESS OTHERWISE SPECIFIED

.XX DECIMAL ± .015
.XXX DECIMAL ± .005
ANGLE ± 2°

RACO

DRAWN BY:	RMV	SCALE:	SIZE:
APP. BY:	N.S.		
DATE:	02-06-19	1:2	A

FILE NO.: 781 CUS

DIMENSION SHEET FOR CAT. NO. 781

8.5in*11in