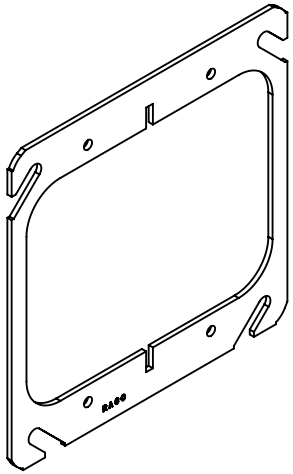

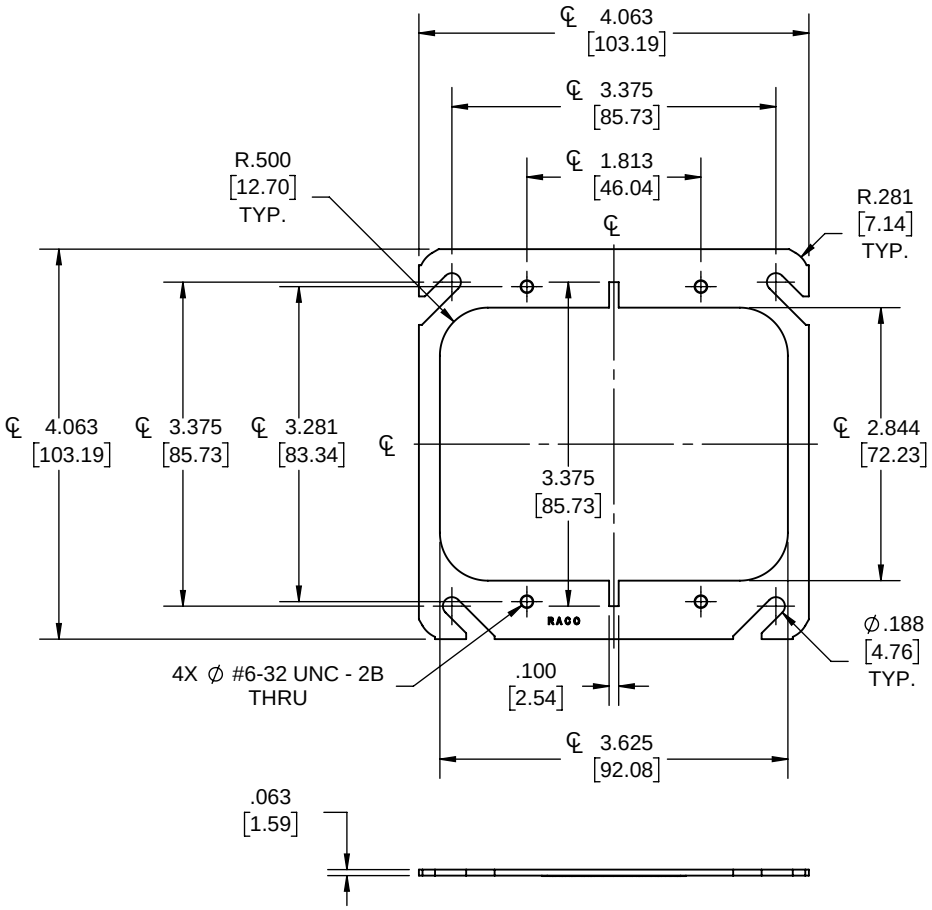

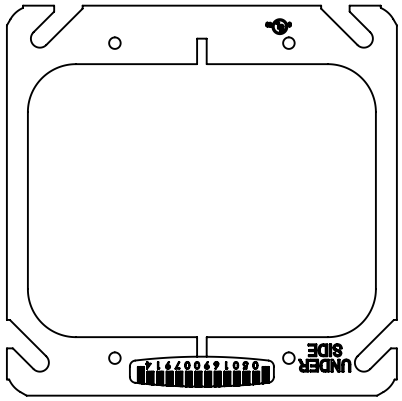

NOTES:
1. ALL DIMENSIONS ARE IN INCHES AND [MILLIMETERS]
2. cULus LISTED

LIST OF PARTS

DESCRIPTION	MATERIAL	FINISH
COVER	STEEL	GALVANIZED

791 CUS

SYM.	REVISION DESCRIPTION	APP	DATE
	INITIAL RELEASE	RMV	03/05/18

THE DESIGN AND DIMENSIONS OF THE PRODUCT SHOWN ON THIS DRAWING ARE SUBJECT TO CHANGE WITHOUT NOTICE

TITLE:

4 SQ. MUD RING, TWO DEVICE, FLAT

791

DIMENSION SHEET FOR CAT. NO.

TOLERANCE UNLESS OTHERWISE SPECIFIED

.XX DECIMAL ±.015
.XXX DECIMAL ±.005
ANGLE ±2°

RACO
South Bend, Indiana

DRAWN BY:	RMV	SCALE:
APP. BY:	N.S.	1:2
DATE:	03/05/18	

SIZE: **A**

8.5in*11in