REVISIONS			
REV.	DATE	DESCRIPTION	BY
-	03-31-17	INITIAL RELEASE	RMV
1	12-14-20	UPDATED TO CURRENT STANDARDS	RMV
2	06/14/22	REMOVED BREAK-OFF TABS, ADDED HARDWARE PACK	RMV

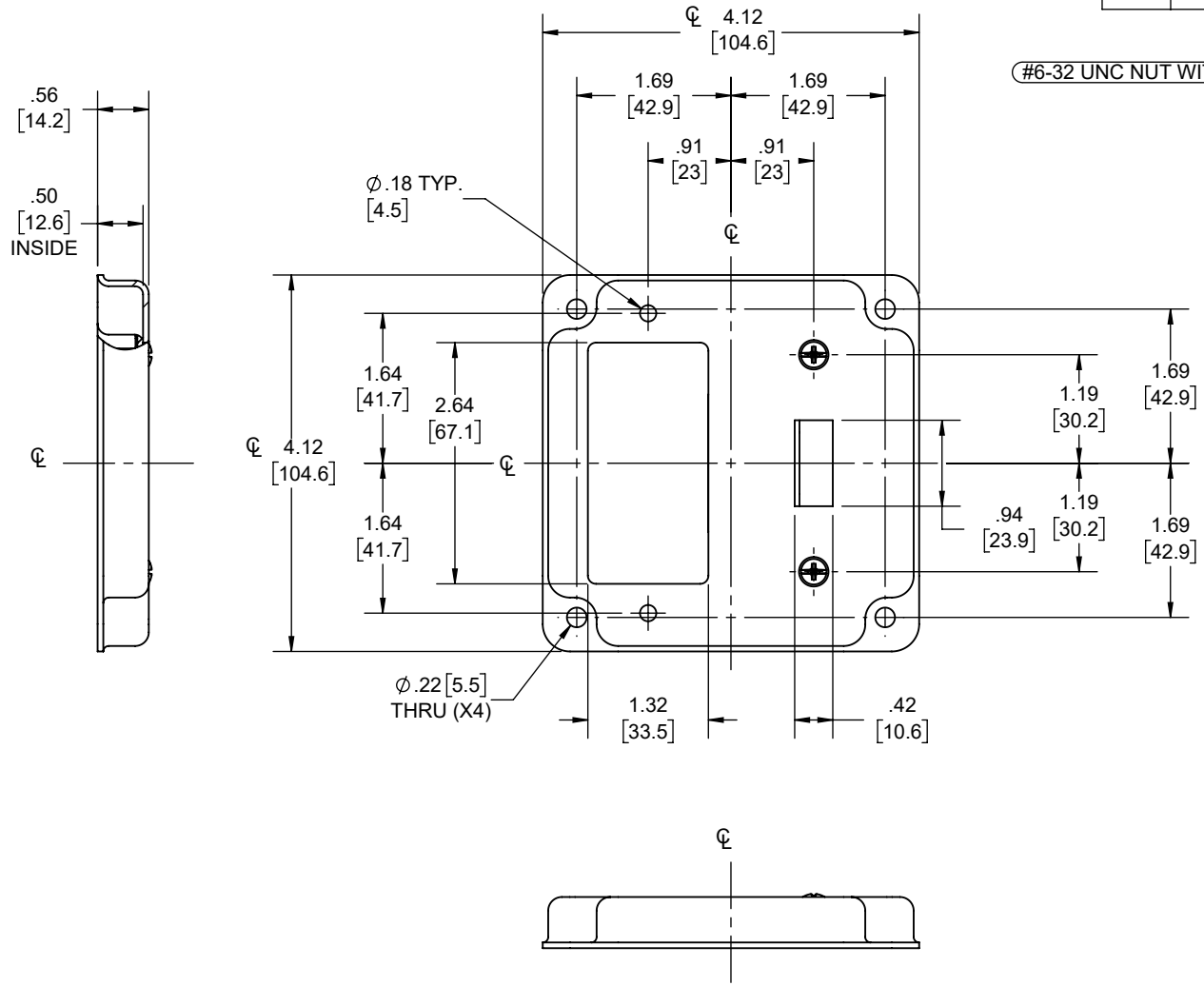

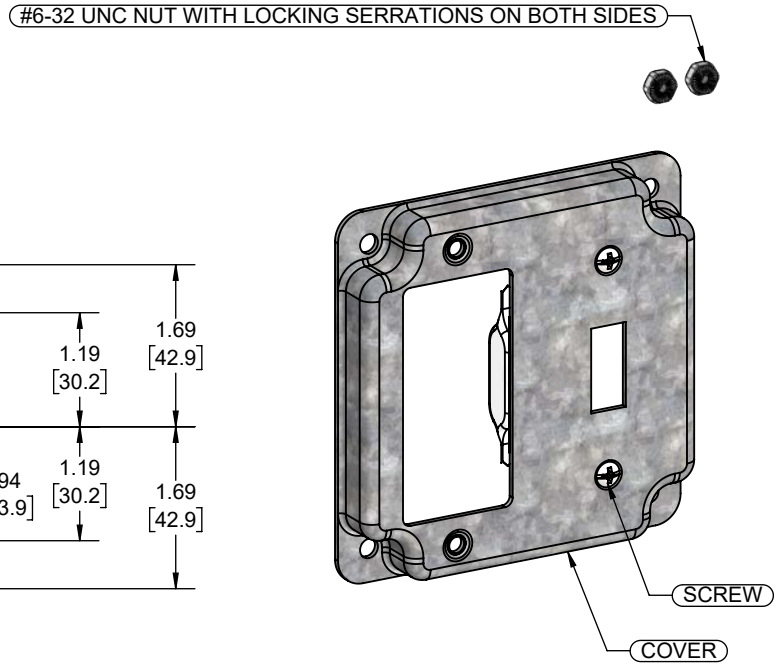

FASTENERS	STEEL	GALVANIZED
COVER	STEEL	GALVANIZED
DESCRIPTION	**MATERIAL**	**FINISH**

LIST OF PARTS

THE DESIGN AND DIMENSIONS OF THE PRODUCT SHOWN ON THIS DRAWING ARE SUBJECT TO CHANGE WITHOUT NOTICE

TITLE:

4" SQ CC COVER FOR (1) TOGGLE & (1) GFCI

TOLERANCE UNLESS OTHERWISE SPECIFIED

.XX DECIMAL ± .015
.XXX DECIMAL ± .005
ANGLE ± 2°

RACO

DRAWN BY:	RMV	SCALE:	SIZE:
APP. BY:	RMV		A
DATE:	03-31-17	1:2	

FILE NO.: 814C CUS

DIMENSION SHEET FOR CAT. NO. 814C

8.5in*11in

NOTES:
1. ALL DIMENSIONS ARE IN INCHES AND [MILLIMETERS]
2. BOX VOLUME: 6.5 IN³ [107] CM³
3. cULus LISTED