REVISIONS			
REV.	DATE	DESCRIPTION	BY:
-	03-20-19	INITIAL RELEASE	RMV

FILE NO.: 857 CUS

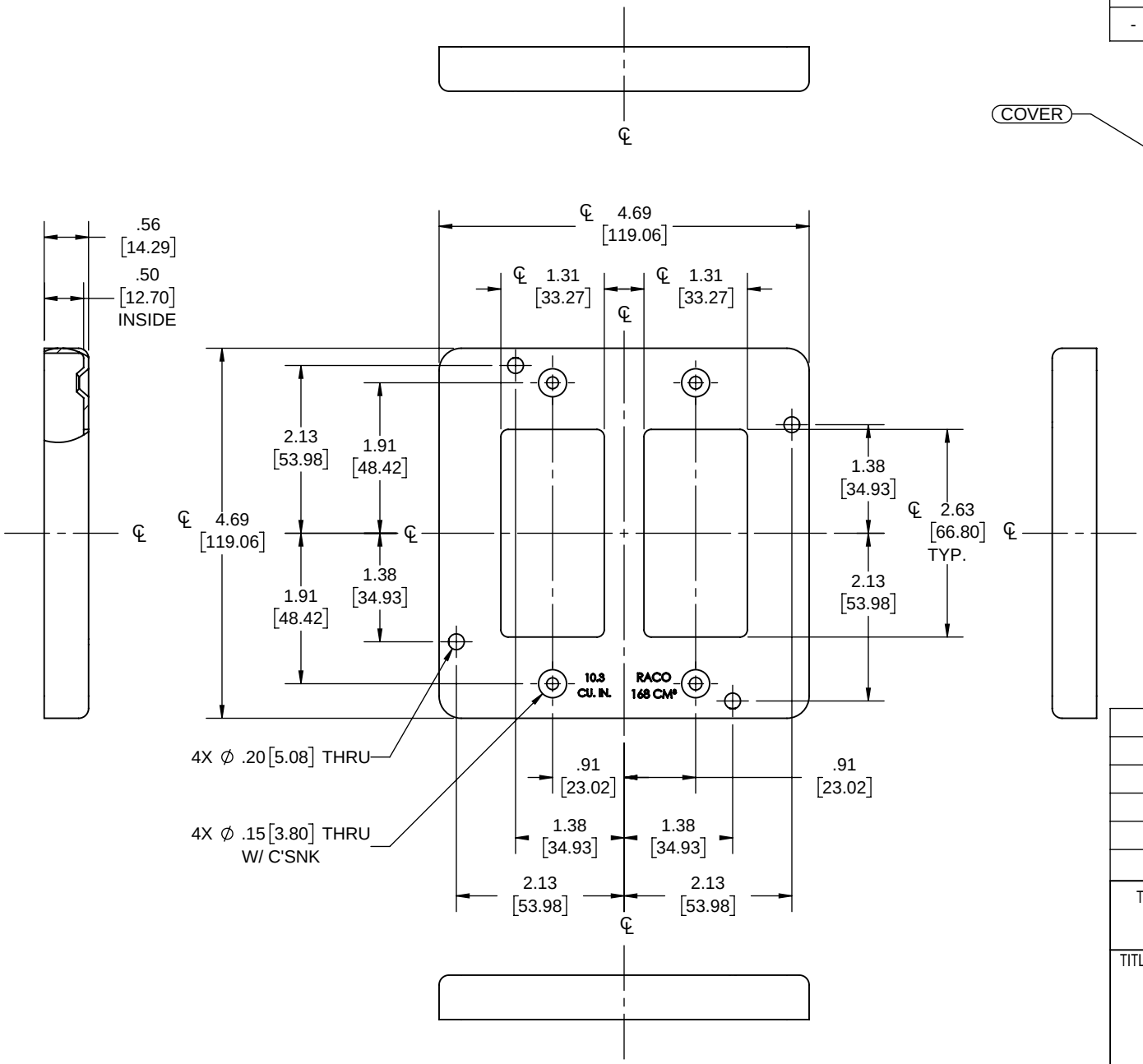

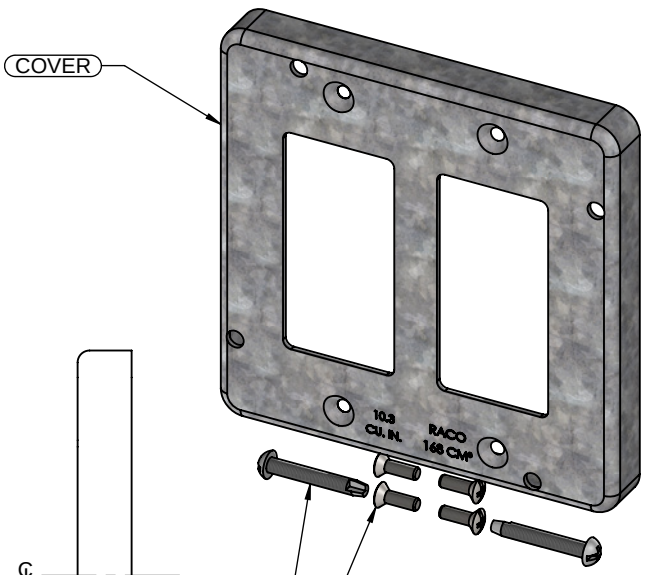

#6-32 x 1/4" WITH COMBO PHILIPS/SLOTTED OVAL HEAD

#8-32 x 1-1/8" R.H. TYPE "T" THREAD CUTTING SCREW W/ PHILIPS/SLOTTED HEAD

SCREWS	STEEL	GALVANIZED
COVER	STEEL	GALVANIZED
DESCRIPTION	**MATERIAL**	**FINISH**

LIST OF PARTS

THE DESIGN AND DIMENSIONS OF THE PRODUCT SHOWN ON THIS DRAWING ARE SUBJECT TO CHANGE WITHOUT NOTICE

TITLE:

4-11/16" SQ. COVER, DOUBLE DEVICE, 2-GFCI, BAGGED

TOLERANCE UNLESS OTHERWISE SPECIFIED

.XX DECIMAL ± .015
.XXX DECIMAL ± .005
ANGLE ± 2°

RACO

DRAWN BY:	RMV	SCALE:	SIZE:
APP. BY:	N.S.		
DATE:	03-20-19	1:2	A

DIMENSION SHEET FOR CAT. NO. 857

8.5in*11in

NOTES:

1. ALL DIMENSIONS ARE IN INCHES AND [MILLIMETERS]
2. BOX VOLUME: 10.3 INj [168 CMj]
3. cULus LISTED