REVISIONS			
REV.	DATE	DESCRIPTION	BY:
-	03-20-19	INITIAL RELEASE	RMV

FILE NO.: 858 CUS

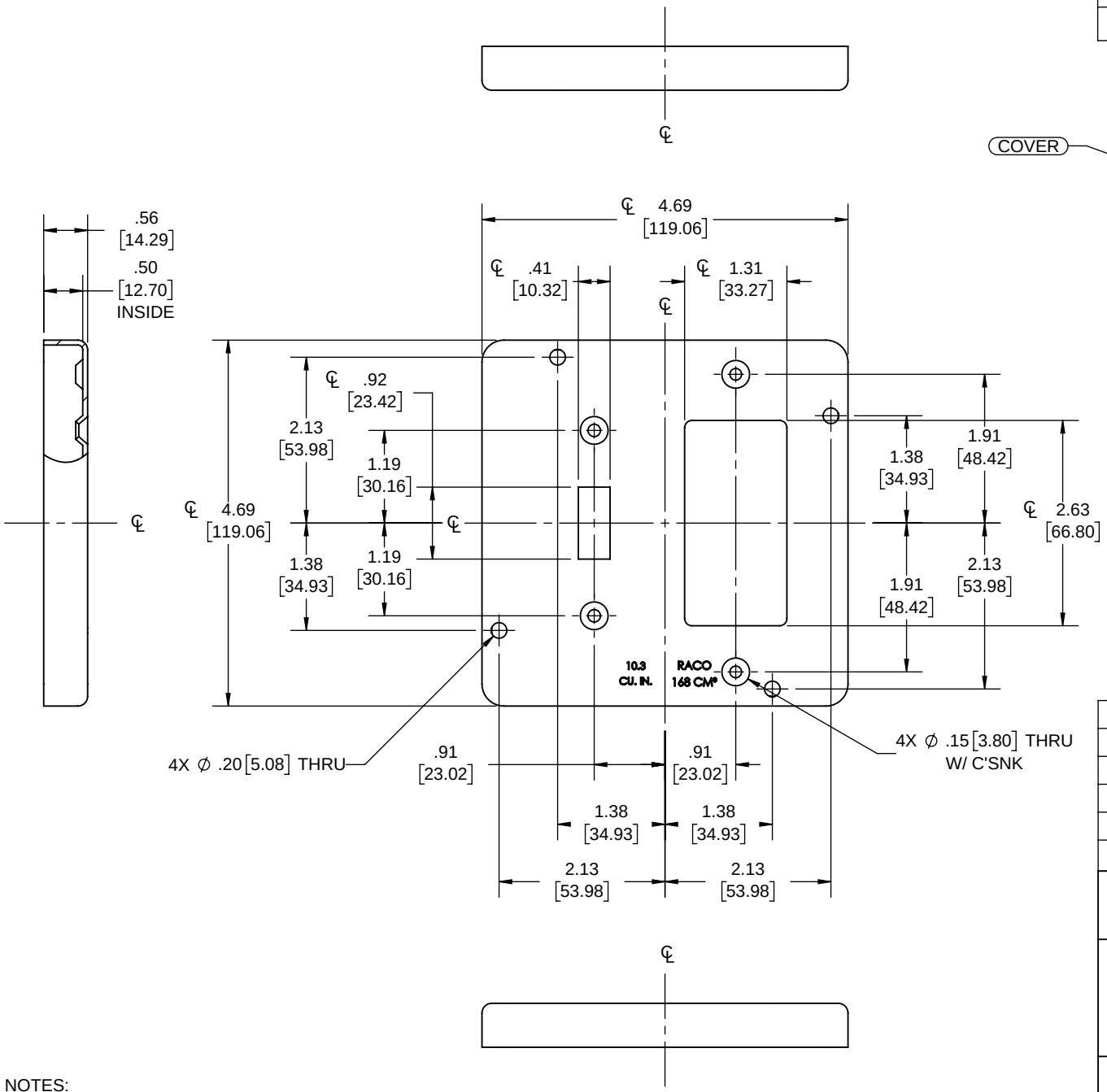

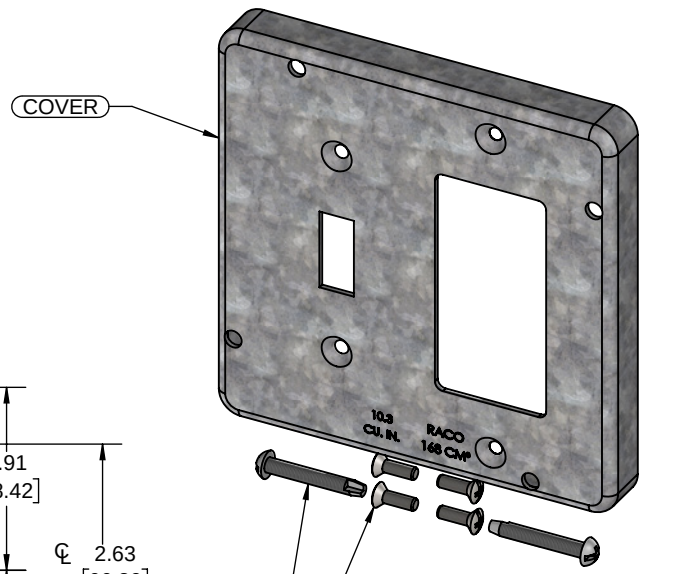

NOTES:

1. ALL DIMENSIONS ARE IN INCHES AND [MILLIMETERS]
2. BOX VOLUME: 10.3 INj [168 CMj]
3. cULus LISTED

SCREWS	STEEL	GALVANIZED
COVER	STEEL	GALVANIZED
DESCRIPTION	**MATERIAL**	**FINISH**

LIST OF PARTS

THE DESIGN AND DIMENSIONS OF THE PRODUCT SHOWN ON THIS DRAWING ARE SUBJECT TO CHANGE WITHOUT NOTICE

TITLE:

4-11/16" SQ. COVER, DOUBLE DEVICE, 1-TOGGLE 1-GFCI, BAGGED

TOLERANCE UNLESS OTHERWISE SPECIFIED

.XX DECIMAL ± .015
.XXX DECIMAL ± .005
ANGLE ± 2°

RACO

DRAWN BY:	RMV	SCALE:	SIZE:
APP. BY:	N.S.		A
DATE:	03-20-19	1:2	

DIMENSION SHEET FOR CAT. NO. 858

8.5in*11in