REVISIONS			
REV.	DATE	DESCRIPTION	BY:
-	03-20-19	INITIAL RELEASE	RMV

FILE NO. : 878 CUS

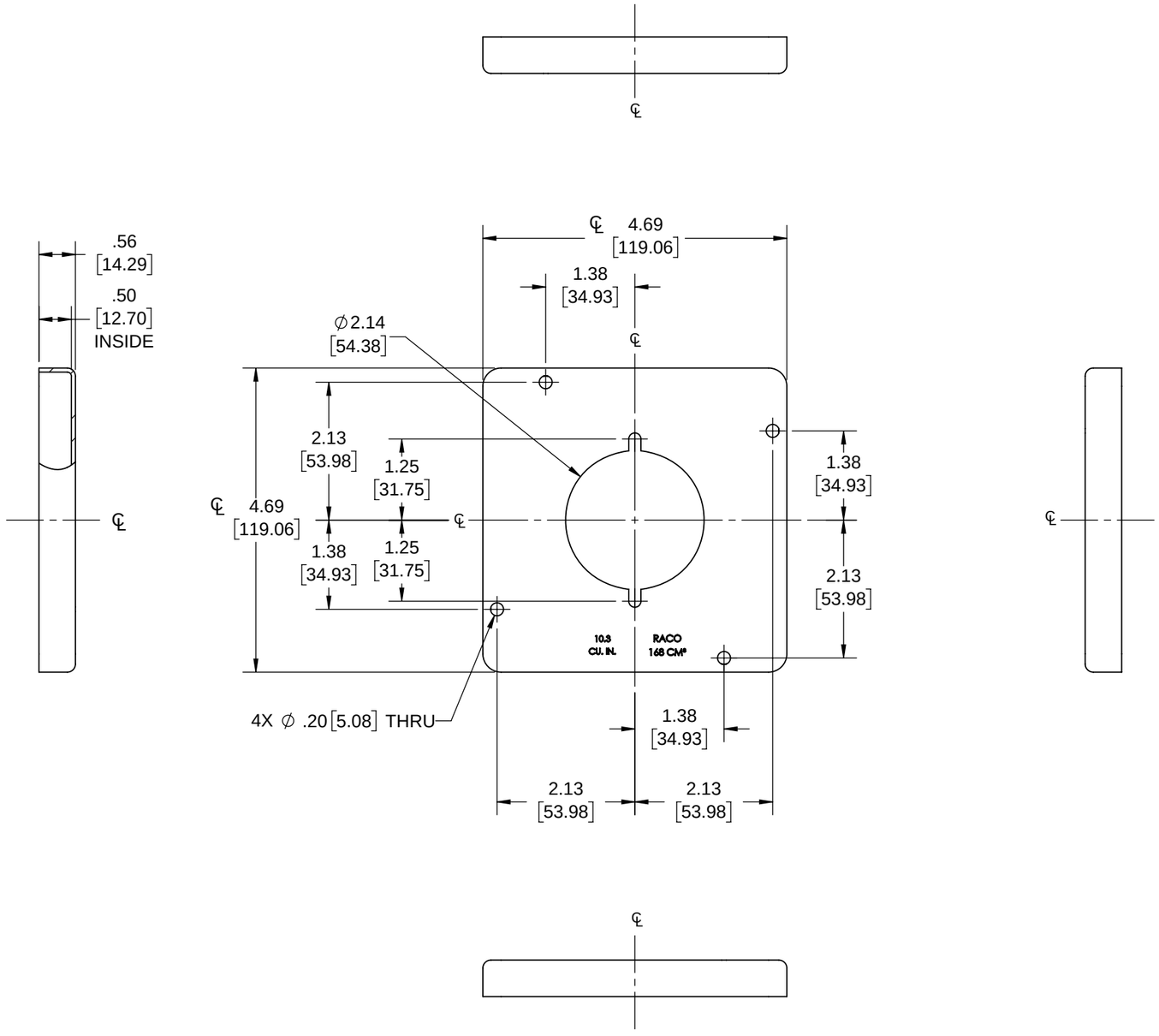

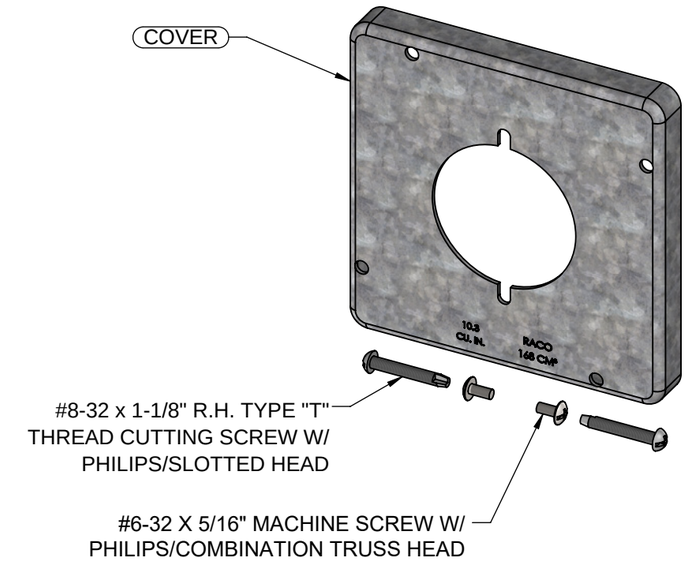

NUTS	STEEL	GALVANIZED
SCREWS	STEEL	GALVANIZED
COVER	STEEL	GALVANIZED
DESCRIPTION	**MATERIAL**	**FINISH**

LIST OF PARTS

THE DESIGN AND DIMENSIONS OF THE PRODUCT SHOWN ON THIS DRAWING ARE SUBJECT TO CHANGE WITHOUT NOTICE

TITLE:
4-11/16" SQ. COVER, DOUBLE DEVICE, 2.141 DIA. 30A-50A, BAGGED

TOLERANCE UNLESS OTHERWISE SPECIFIED

.XX DECIMAL ±.015
.XXX DECIMAL ±.005
ANGLE ±2°

RACO

DRAWN BY:	RMV	SCALE:	SIZE:
APP. BY:	N.S.		
DATE:	03-20-19	1:2	B

DIMENSION SHEET FOR CAT. NO. **878**

8.5in*11in

NOTES:
1. ALL DIMENSIONS ARE IN INCHES AND [MILLIMETERS]
2. BOX VOLUME: 10.3 IN¡ [168 CM¡]
3. cULus LISTED